chawla aluminium

PRODUCT CATALOGUE

Pakistan's only Profiles Neutralized from Chemicals, Human Friendly & 100% Safe to Touch

Architectural Profiles for Doors & Windows

Engineered with Excellence

UAN: 111-CHAWLA (242-952)

chawla aluminium

Chairman's Message

The journey of success that started four decades ago has today become a symbol of economic & social development of Pakistan. Yet Chawla Group of Industries feels there is no end when it comes to achievements thus it strives to explore the ultimate business opportunities. Being a business group based on trust, skill, knowledge, and experience, we are committed to pursue the goal of discovery, reliability, and continuous growth.

Chawla Aluminium is another successful leap, by Chawla Group, towards its focus on the provision of product at a higher degree of accuracy blended with excellent services to its most valued customers. With a progressive team of professionals, Chawla Group takes the challenge of consistent customer - centered growth by providing distinguished Aluminium solutions that make a significant difference in transforming the dreams into realities.

Our foremost task cause is to preserve forests and nature by providing awareness and suitable products to people, so that a shift from wood to aluminium can be achieved. So Chawla Aluminium can proudly claim an innovative contribution in making this planet a safer habitat for mankind.

Under the rich fabric of expertise, commitment & excellence, I pray for a safer, prosperous, & developed Pakistan where we all must be adding value as per our capacity.

Mian Mohammad Munir Chawla
Chairman

chawla aluminium

Chawla Group is a well-established and trusted name due to more than 50 years of their presence in the market. Besides, it is not only the presence but also the dedicated commitment to reach unimaginable heights of excellence, which makes Chawla Group stand out among all its competitors in local and global market.

Chawla Aluminium presents fully automatic hydraulic extrusion and anodizing plant controlled by a touch screen PLC panel. We have introduced top class German Schloemann Technology for exterior finish.

Each Profile of Chawla Aluminium is made in Accordance with the International Standards of Quality using European Anodizing Technology and ELCA rectifier for attaining desired micron with APC control unit. Chawla Aluminium is a pioneer in installing a neutralization plant in Pakistan. The water treatment plant is one of its kind innovations in Pakistan highlighting the fact that we are an international company. Chawla Aluminium also has and incomparable system of Packaging for safe transportation; along with fast delivery.

Chawla Aluminium uses superior quality imported, 6 meters and 7 inch diameter billet, made of alloy 6063. Imported Billet is the internationally acclaimed Aluminium raw material meeting standards of quality Aluminium profiles. Thses are homogenized, and 100% ultrasonically inspected billets. This ingenuity and technical expertise is what highlights our unique presence among our competitors. This distinctive feature enables us to produce profiles at any scale in a time efficient manner.

OUR DISTINCTIVE FEATURES

- Short stroke German Extrusion technology.
- Imported 6063 billet.
- European Anodizing using ELCA rectifiers from Italy.
- Product range up to 12-90 microns.
- Scratch free glowing surface.
- Hardness up to 15.
- Color uniformity using best European technology.

PROPERTIES OF ALLOY AA 6063

CHEMICAL COMPOSITION			MECHANICAL PROPERTIES	
	Min ----	Max		
Silicon	0.41	0.46	Ultimate Tensile Strength	205 N/mm2
Iron	0.15	0.19	Tensile Yield Strength	165/N/mm2
Copper		0.02	Elongation if 50 mm	12%
Manganese		0.02	Hardness (BHN)	65
Magnesium	0.48	0.52	Shear Strength	125 N/mm2
Chrome		0.02	Fatigue Limit	75 N/mm2
Titanium		0.02		
Other Each		0.02		
Other Total		0.10		

chawla aluminium

Contents

Contents	Page No.
Box Series Sliding Windows	01
Semi Box Series Sliding Windows	02
Round Series Sliding Windows	03
Collar Box series Sliding Widows	04
Box Series Sliding Windows	06
Sliding Double Glaze	08
Deluxe Fix Glazing Shop Front Sections	09
Deluxe Swing Door Sections	11
Deluxe Fix Windows Door Sections	12
Fix & Openable hinged Door Windows Sections	13
Deluxe Swing Door Sections	18
Collar Fix Windows Sections	19
Hinges	21
Flat Series	22
Fix & Openable Windows Sections	23
Hinged Door Sections	24
Economy Fix Glazing Shop Front Sections	26
Double Glaze Sliding Door Sections	27
Executive Double Glaze Fix & Sliding Windows	29
Economy Double Glaze	30
Wood Aesthetics	31
Fix Double Glaze Windows	32
MRA Sections	34
Curtain Wall Sections	36
Executive Curtain Wall Sections	40
Structural Glazing	41
Miscellaneous	46

chawla aluminium

Box Series Sliding Windows

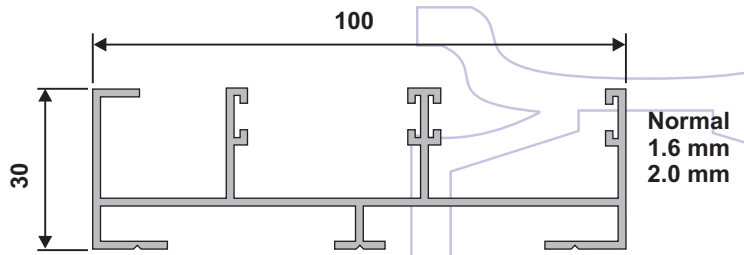

Normal
1.6 mm
2.0 mm

CA DC-30 (BA)

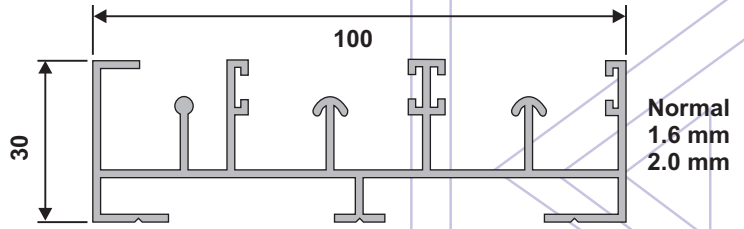

Normal
1.6 mm
2.0 mm

CA DC-26 (BA)

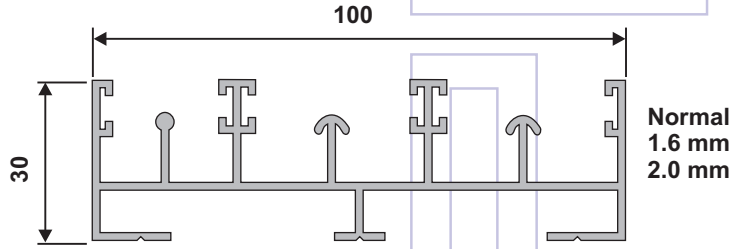

Normal
1.6 mm
2.0 mm

CA DC-26 (C)

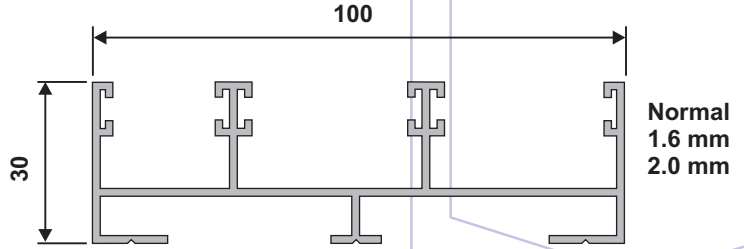

Normal
1.6 mm
2.0 mm

CA DC-30 C

chawla aluminium

Semi Box Series Sliding Windows

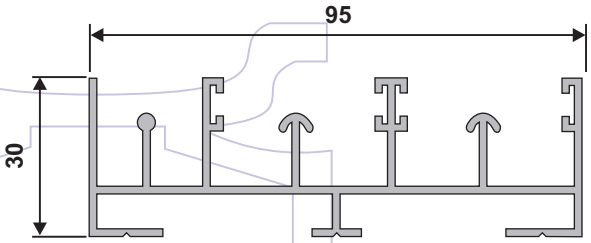

Normal
1.6 mm
2.0 mm

CA DC 26 (B)

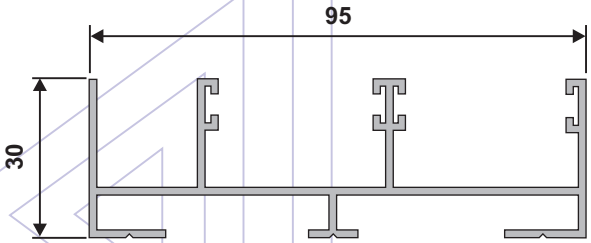

Normal
1.6 mm
2.0 mm

CA DC 30 (B)

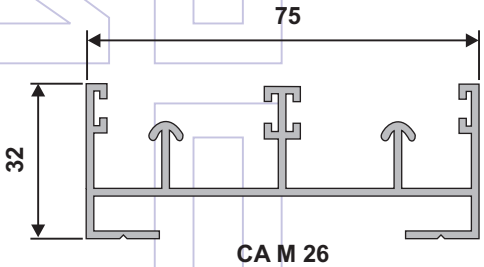

Normal
1.6 mm
2.0 mm

CA M 26

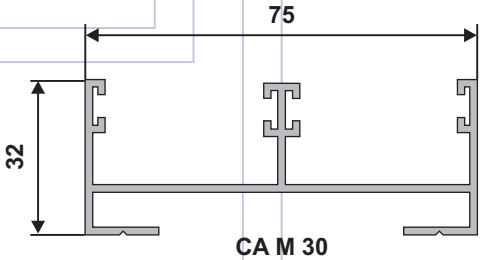

Normal
1.6 mm
2.0 mm

CA M 30

chawla aluminium

Round Series Sliding Windows

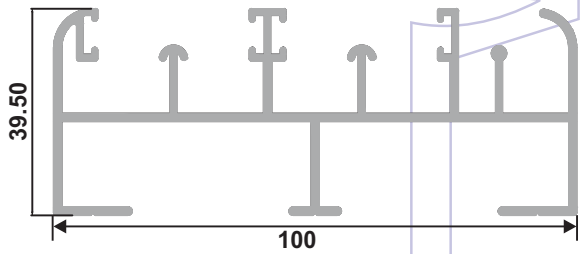

CA DC - 26 J
1.6 mm

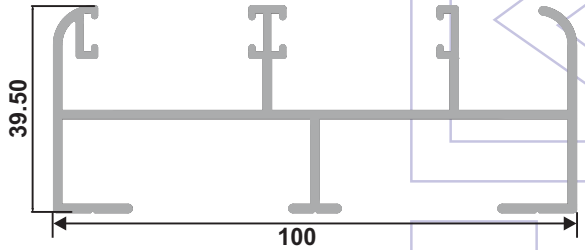

CA DC - 30 J
1.6 mm

chawla aluminium

Collar Box Series Sliding Windows

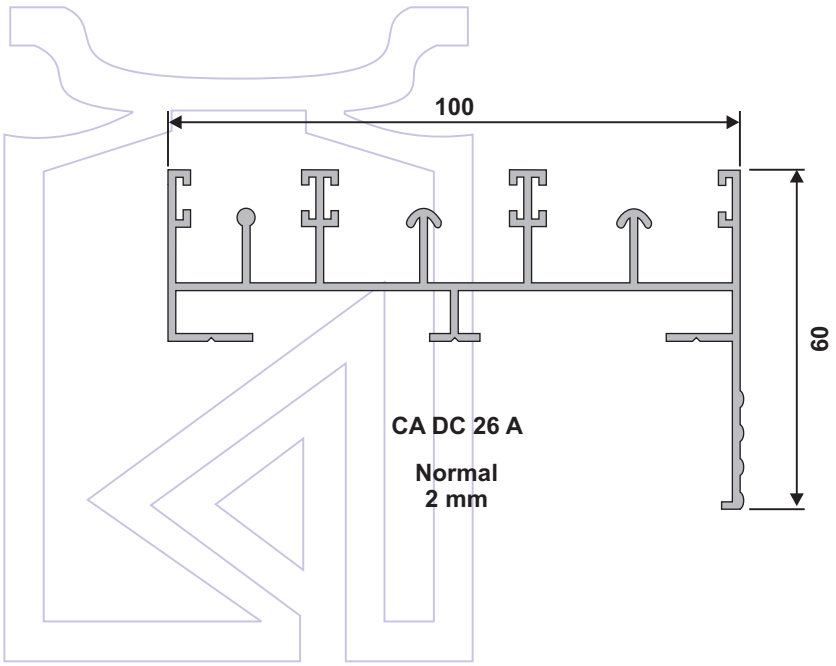

CA DC 26 A

Normal
2 mm

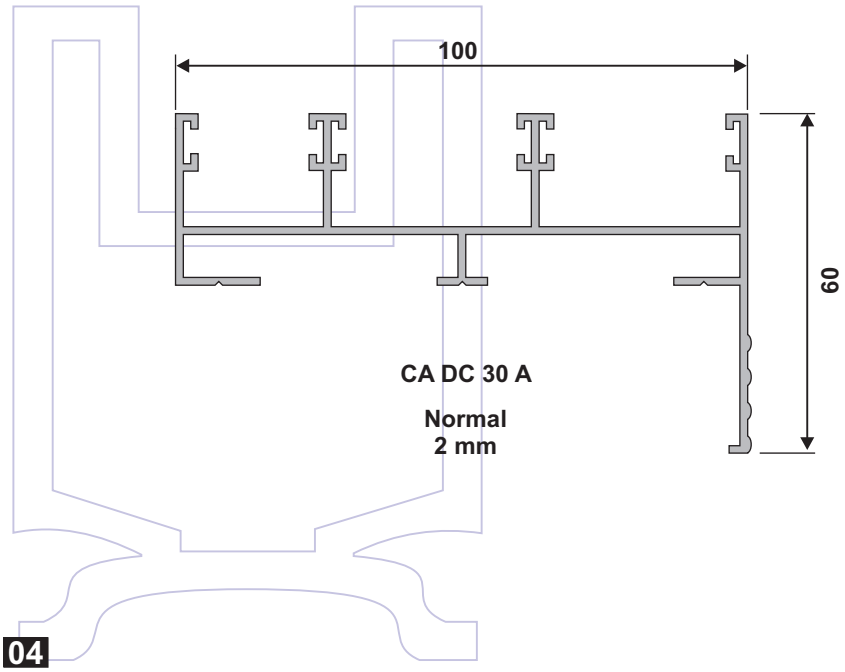

CA DC 30 A

Normal
2 mm

chawla aluminium

Collar Box Series Sliding Windows

CA DC-26 F
Normal
1.6 mm
2.0 mm

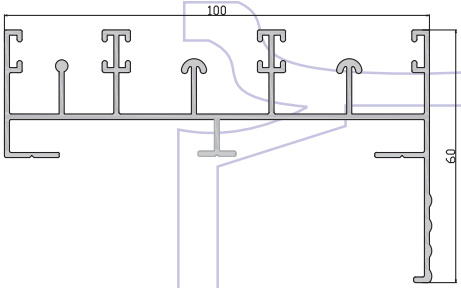

CA DC-30 F
Normal
1.6 mm
2.0 mm

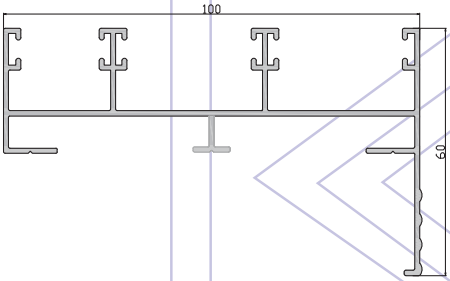

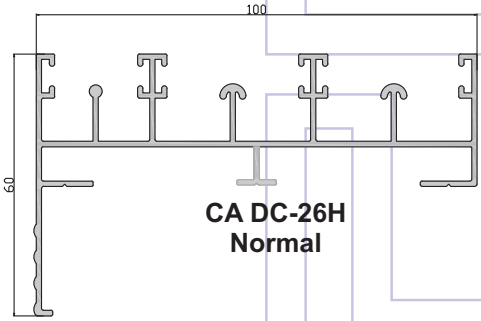

CA DC-26H
Normal

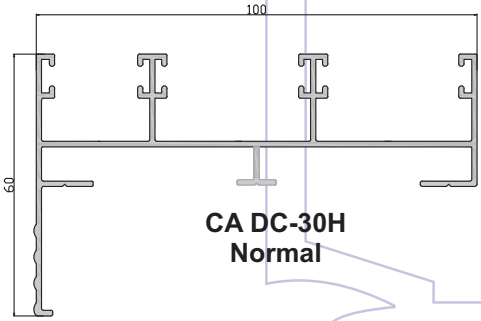

CA DC-30H
Normal

chawla aluminium

Box Series Sliding Windows

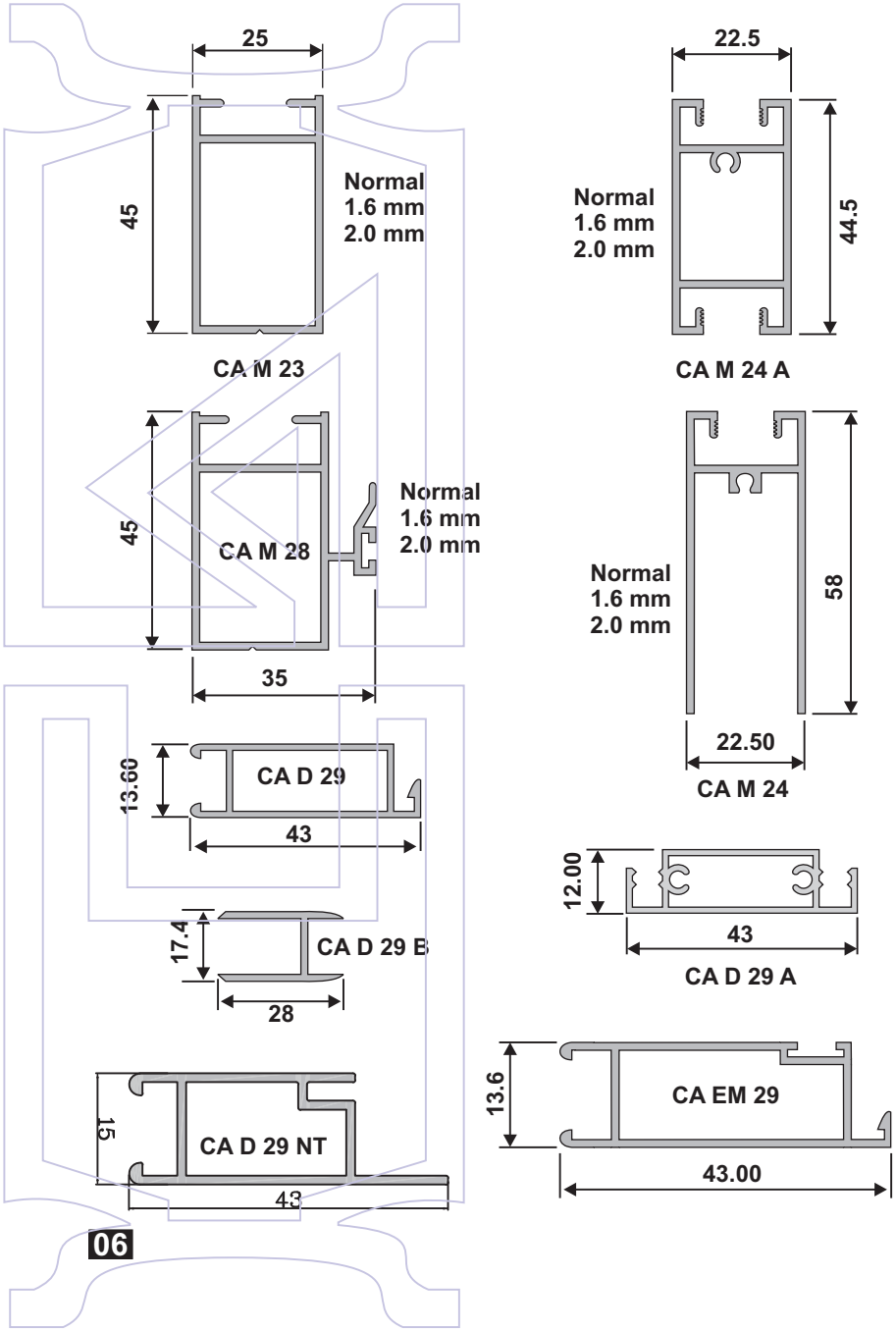

chawla aluminium

Box Series Sliding Windows

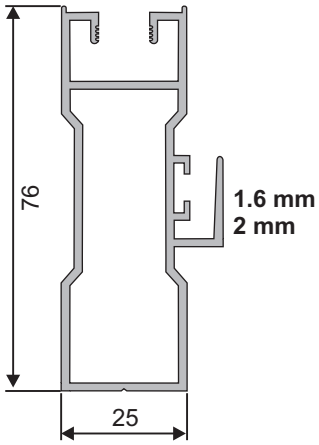

CA M 28 AA

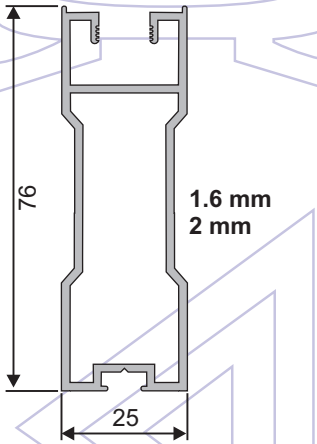

CA M 23 AA

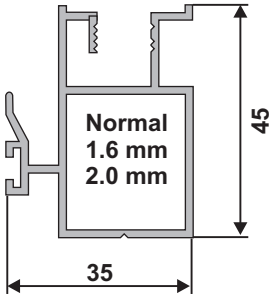

CA M 28 (A)

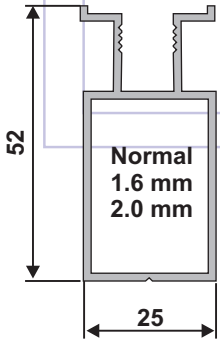

CA M 23 (A)

chawla aluminium

Sliding Double Glaze

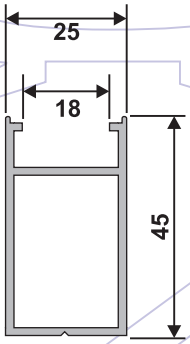

CA M 23 B
1.6mm
2 mm

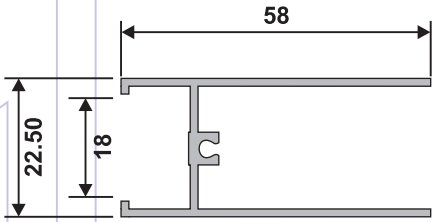

CA M 24 B
1.6mm
2 mm

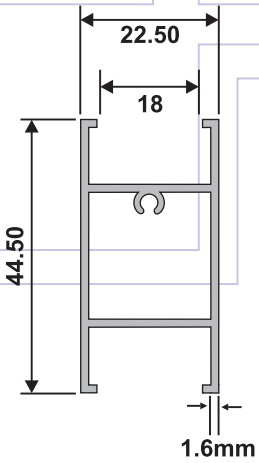

CA M 24 C
1.6mm

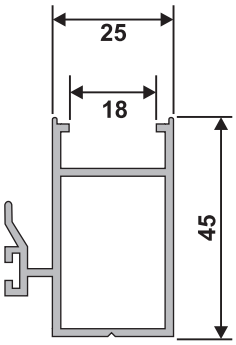

CA M 28 B
1.6mm
2 mm

chawla aluminium

Deluxe Fix Glazing / Shop Front Sections

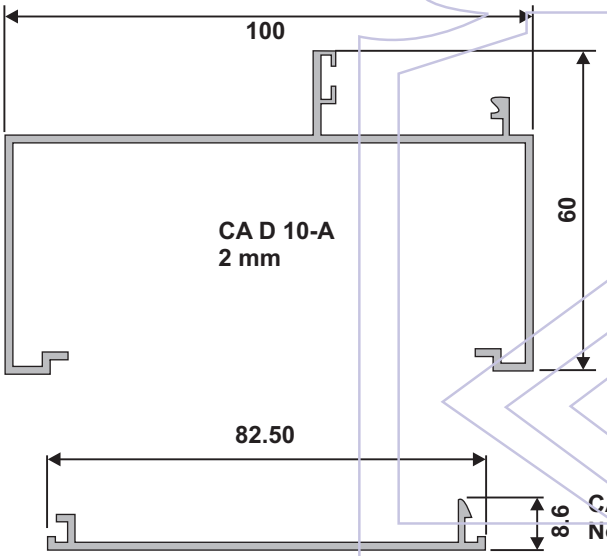

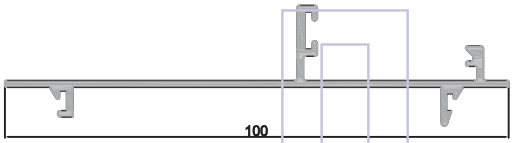

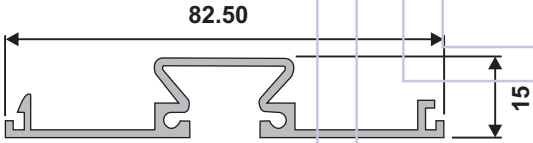

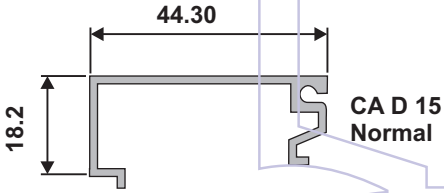

chawla aluminium

Deluxe Fix Glazing / Shop Front Sections

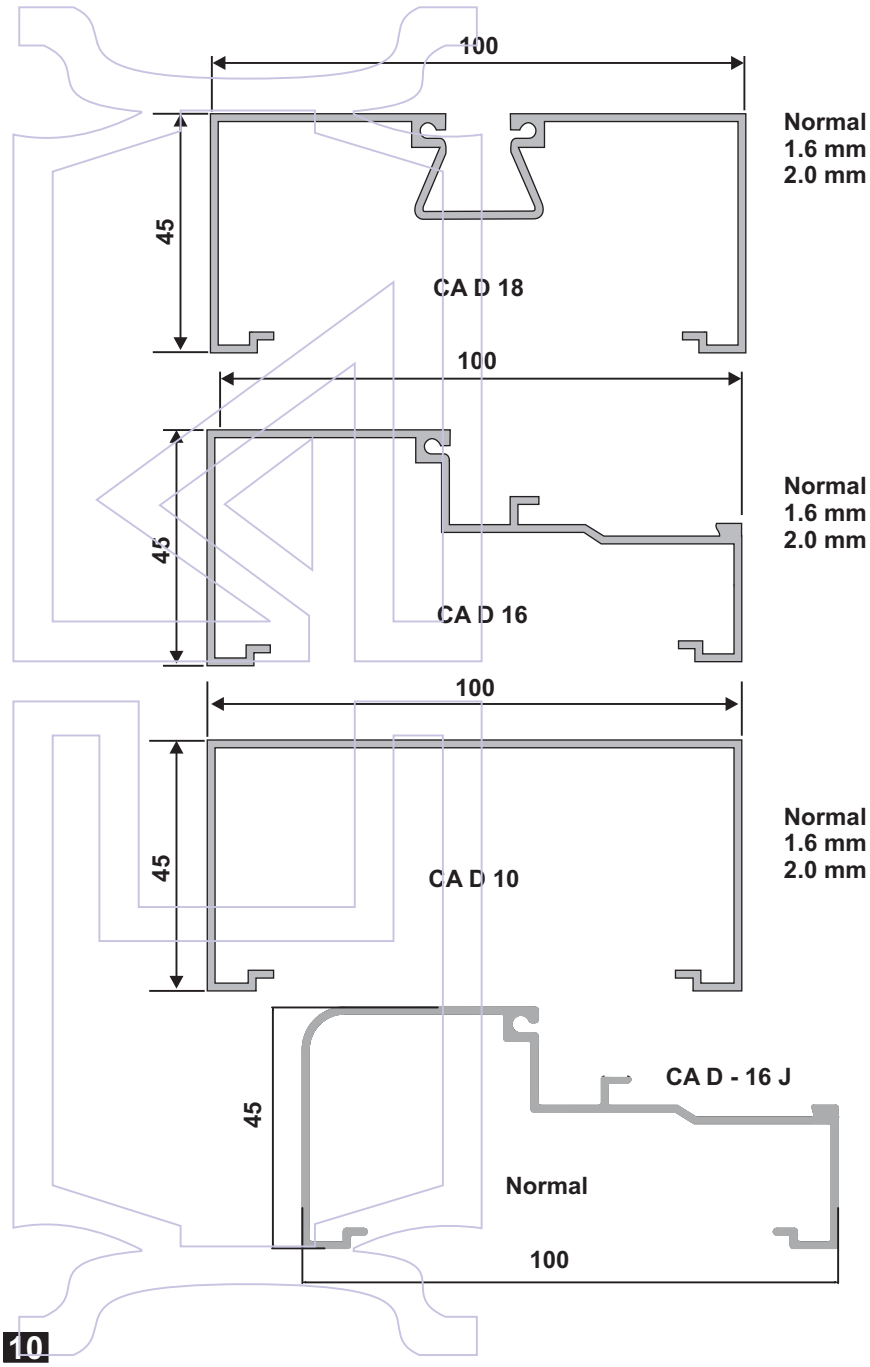

chawla aluminium

Deluxe Swing Door Sections

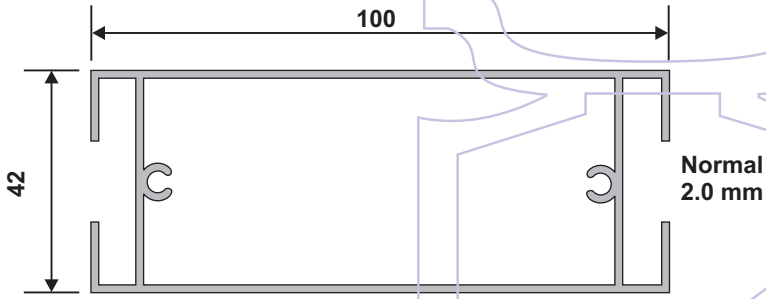

CA D 46

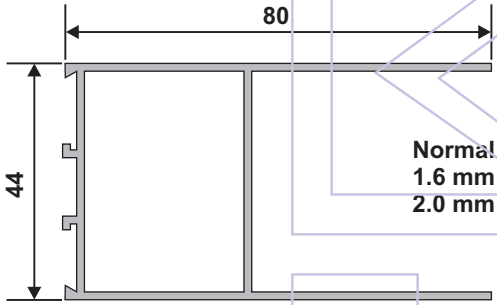

CA D 33

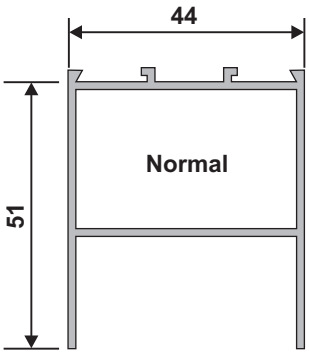

CA D 37

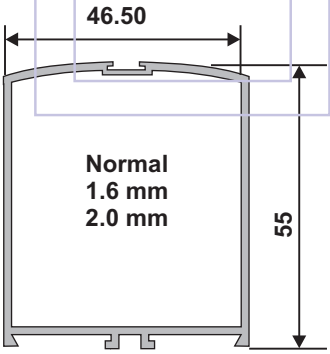

CA D 35

chawla aluminium

Deluxe Fix Windows / Door Sections

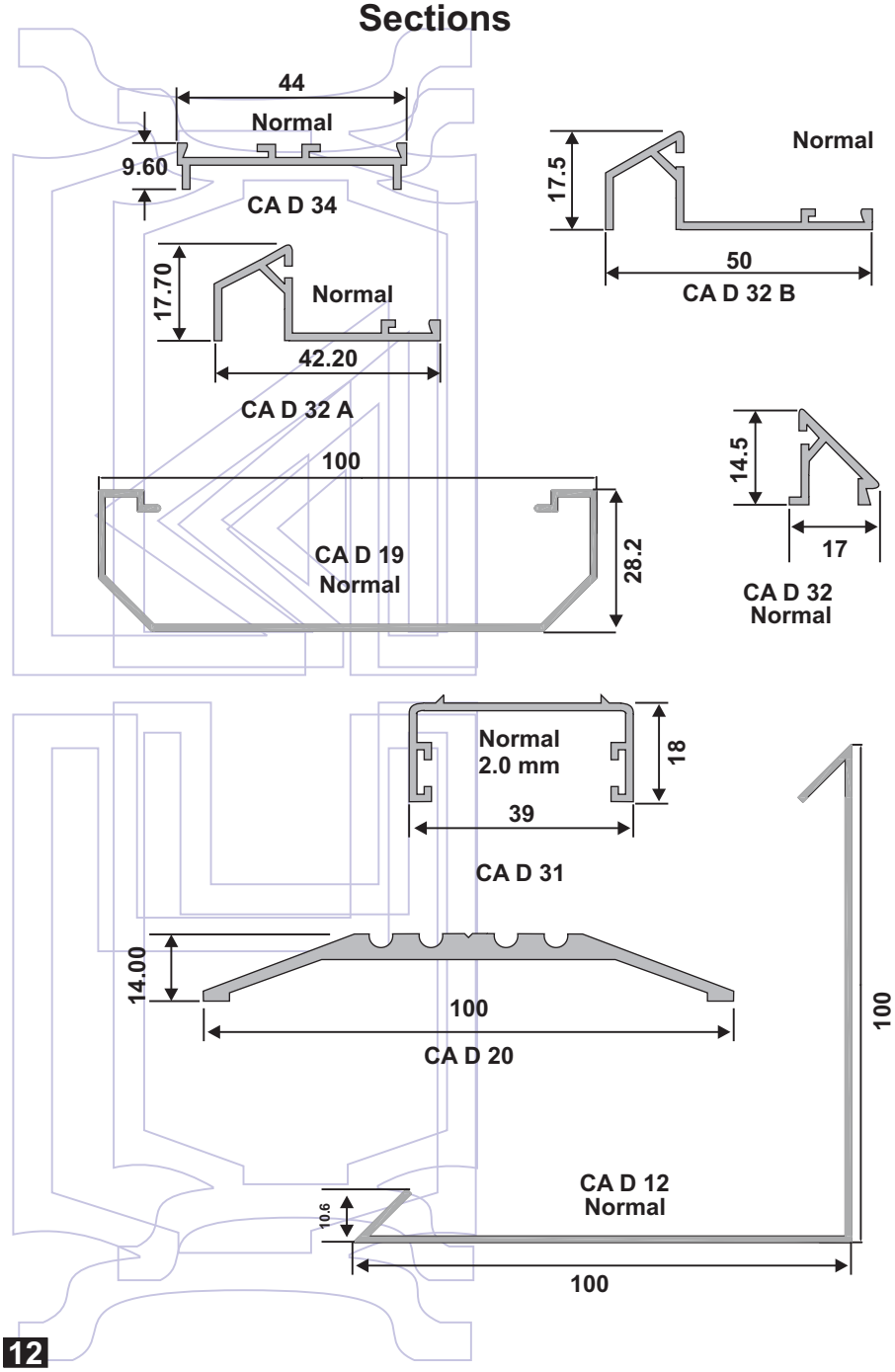

chawla aluminium

Fix & Openable (hinged) Door / Windows Sections

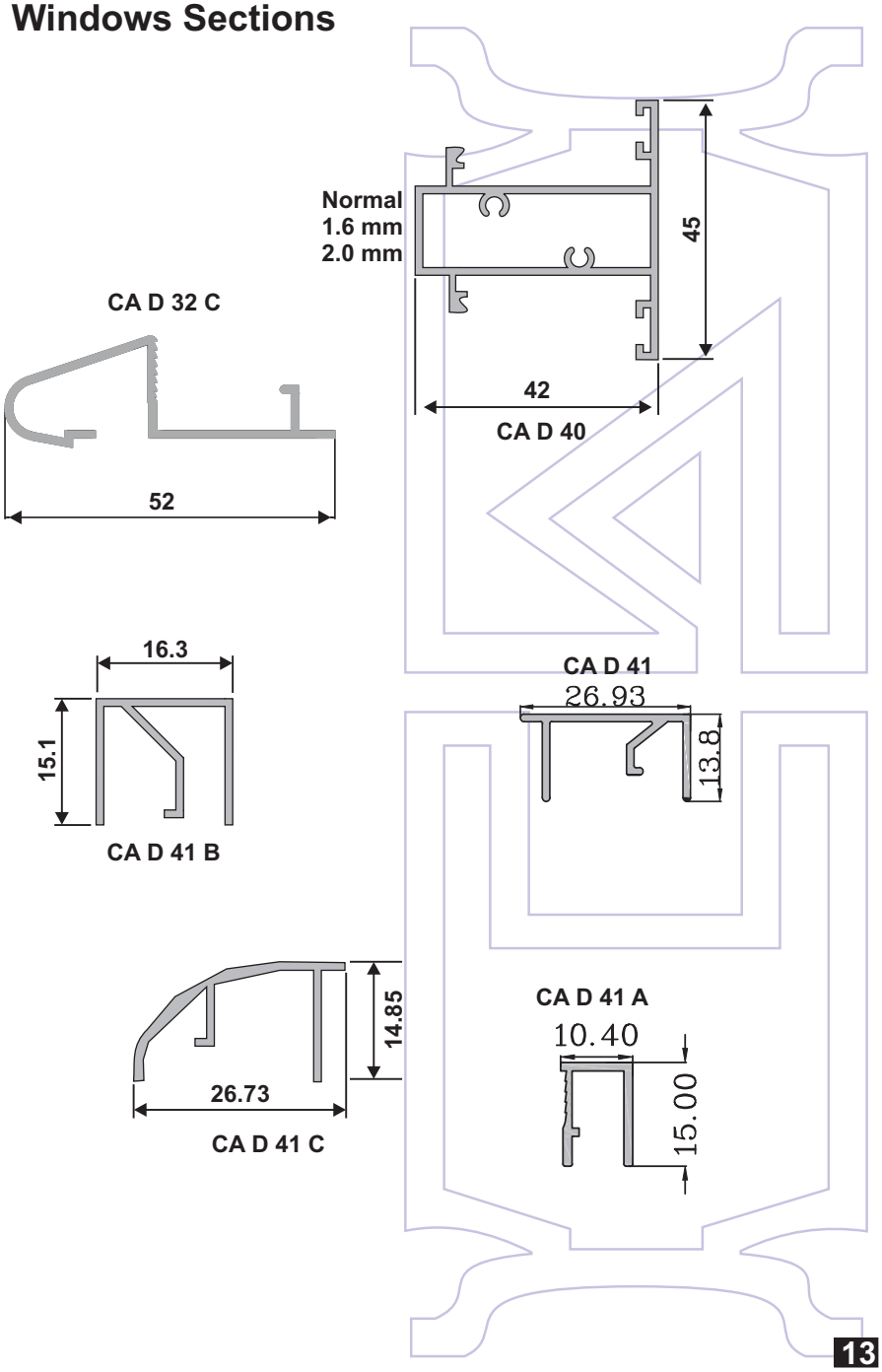

chawla aluminium

Fix & Openable (hinged) Door / Windows Sections

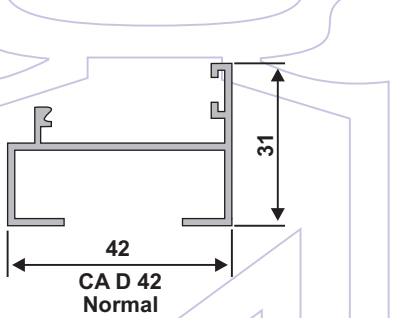

CA D 42
Normal

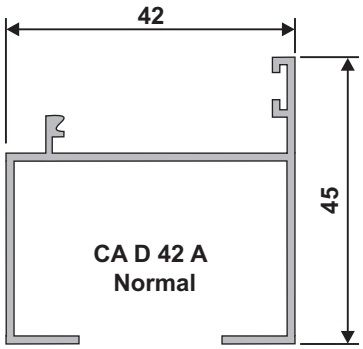

CA D 42 A
Normal

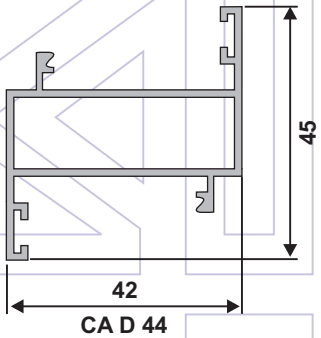

CA D 44
Normal
1.6mm

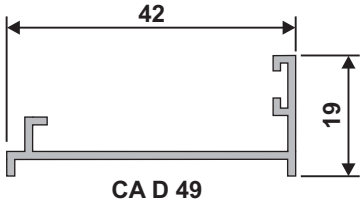

CA D 49
Normal

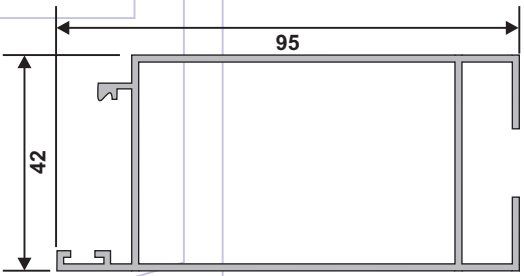

CA D 50 B
Normal

chawla aluminium

Fix & Openable Hinged Door / Windows Sections

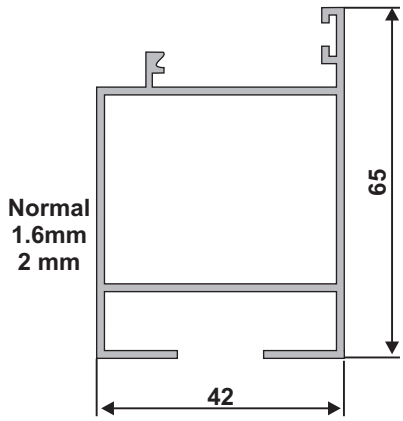

CA D 50

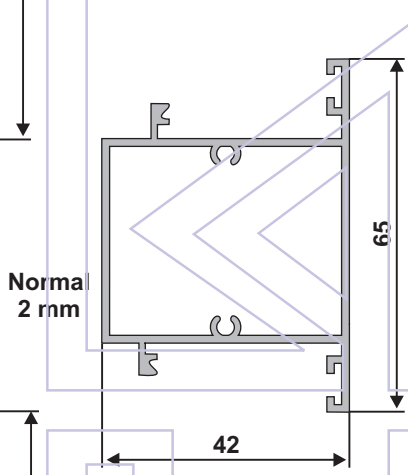

CA D 59

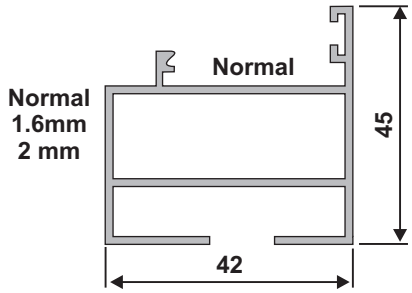

CA D 50 A

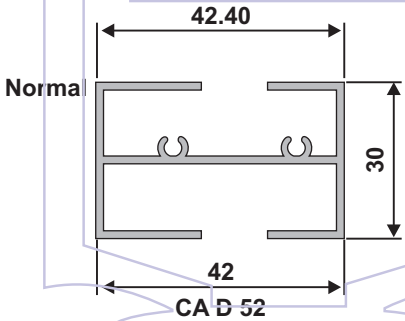

CA D 52

chawla aluminium

Fix & Openable (hinged) Door / Windows Sections

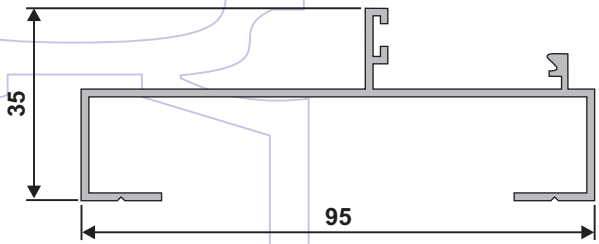

Normal
1.6 mm
2.0 mm

CA D 45 A

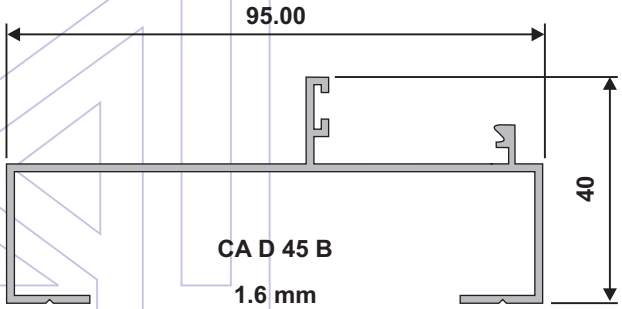

CA D 45 B

1.6 mm

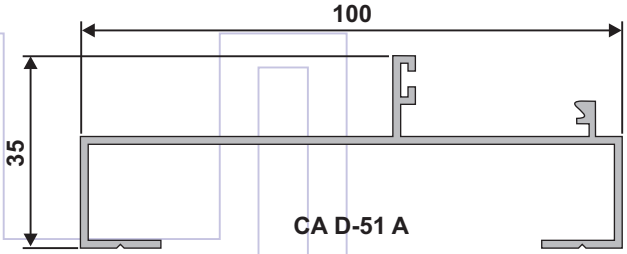

Normal
1.6 mm
2.0 mm

CA D-51 A

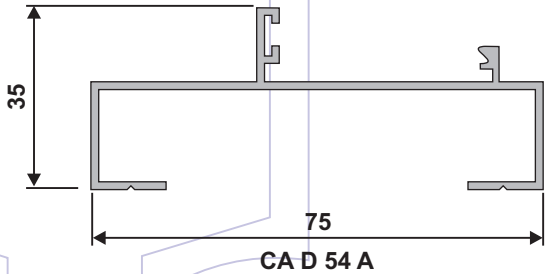

Normal
1.6 mm
2.0 mm

CA D 54 A

chawla aluminium

Fix & Openable (hinged) Door / Windows Sections

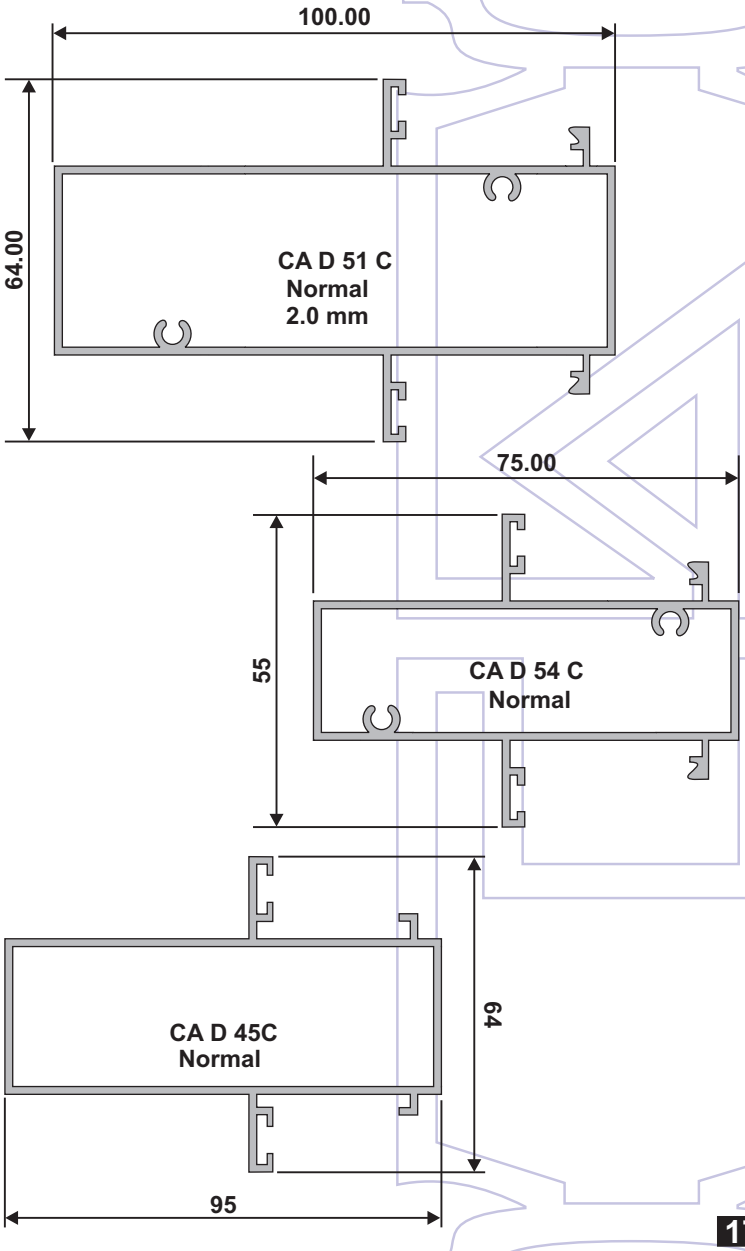

chawla aluminium

Deluxe Swing Door Sections

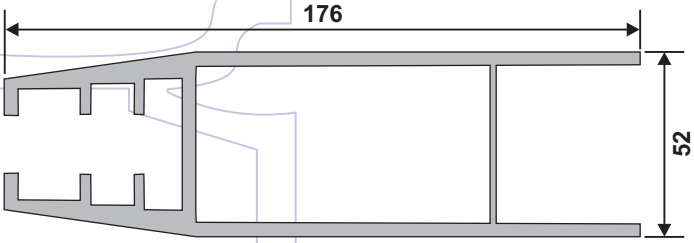

CA D-48L

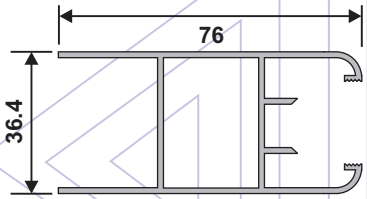

CA ET 48 A
1.3 mm

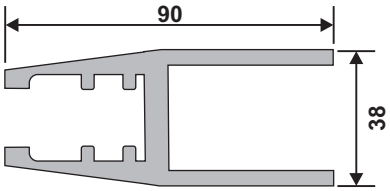

CA D-48

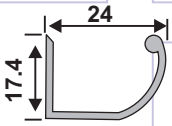

CA C HANDLE

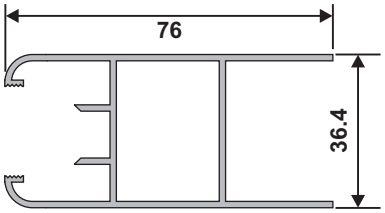

CA D 48 A
2 mm

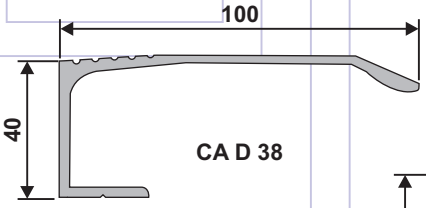

CA D 38

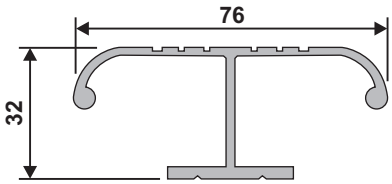

CA D 38B

chawla aluminium

Collar Fix Windows Sections

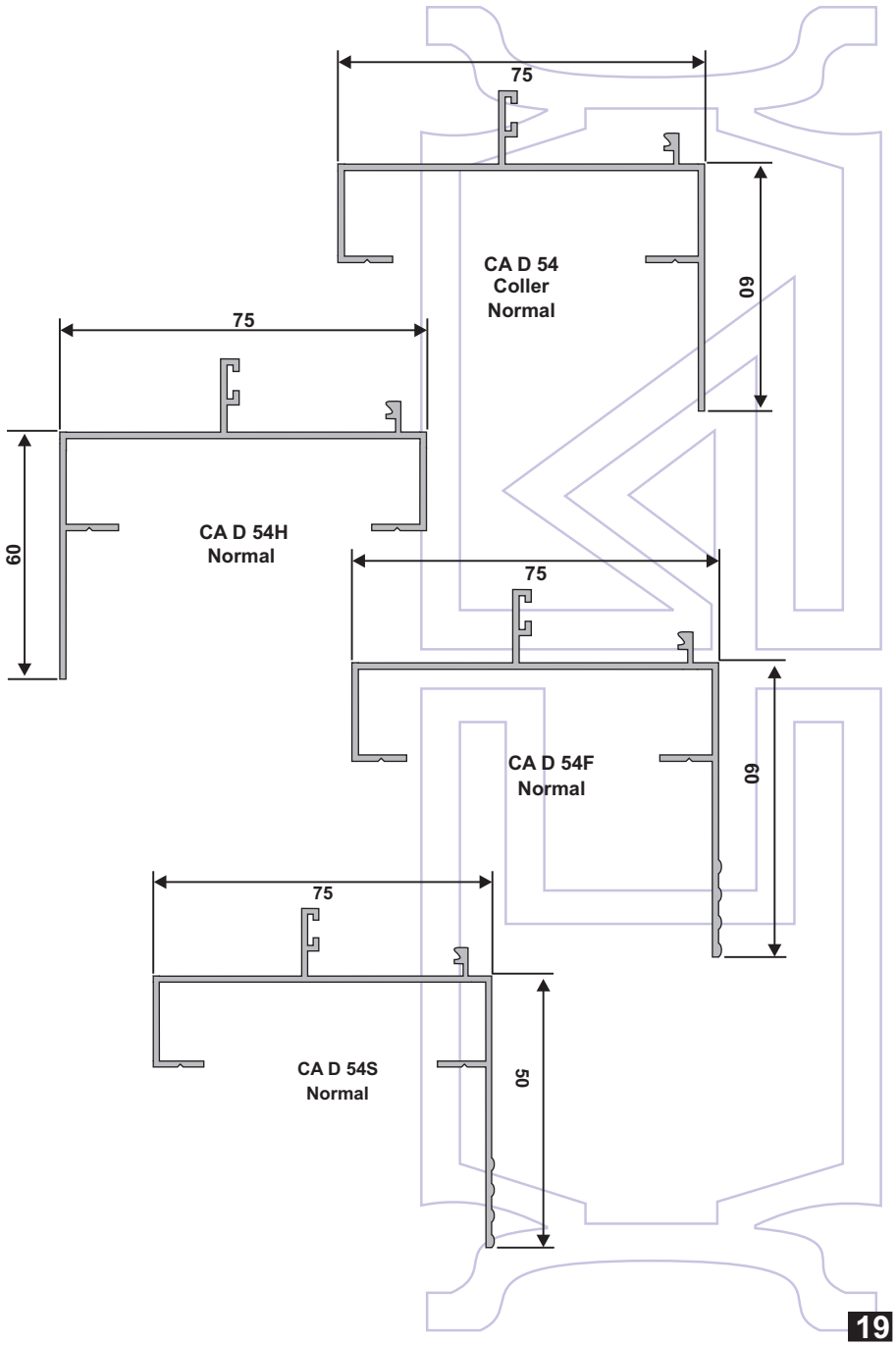

chawla aluminium

Collar Fix Windows Sections

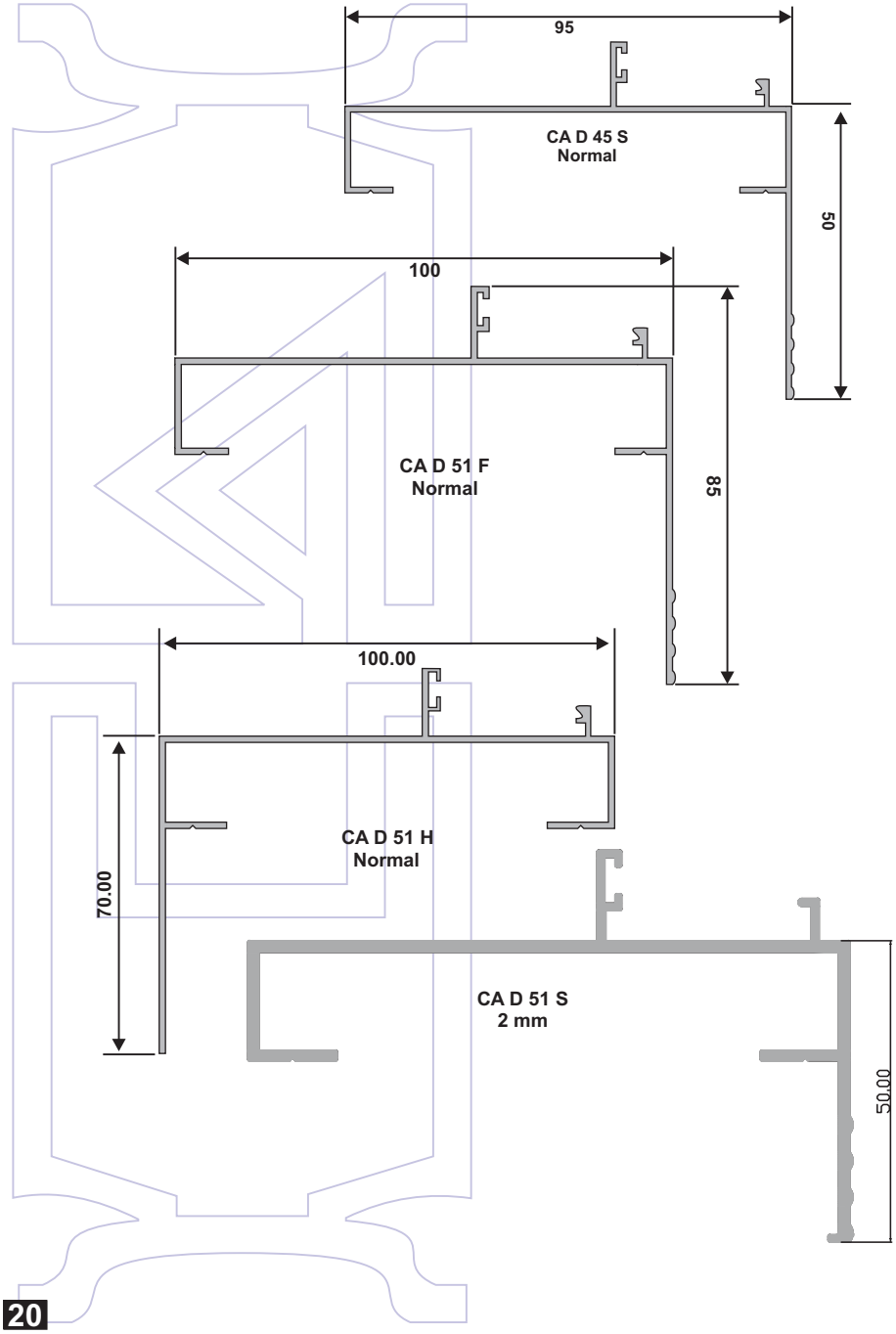

chawla aluminium

HINGES

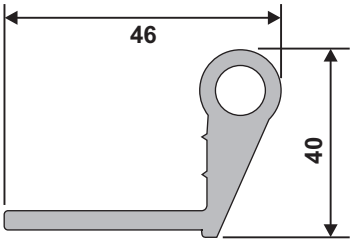

CA D 57

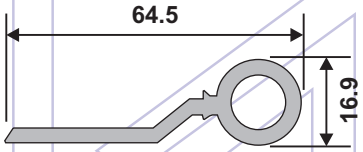

CA HD-10

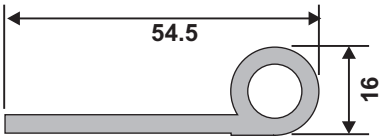

CA D 58

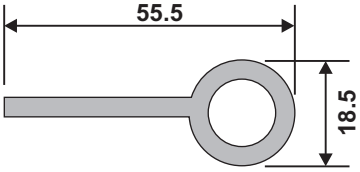

CA AL 58

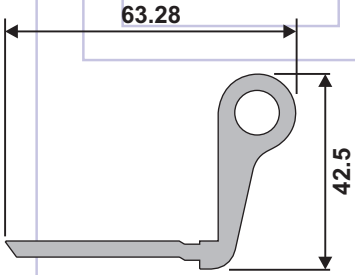

CA HD-11

chawla aluminium

Flat Series

D-25

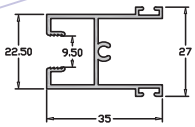

EF-25

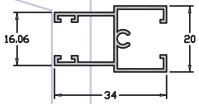

EF-22

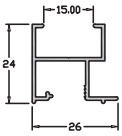

D-24

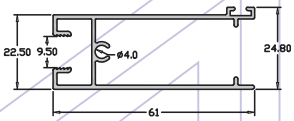

EF-28

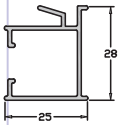

D-28A

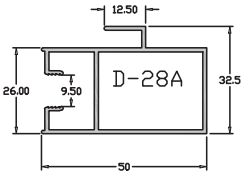

D-26

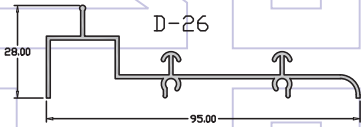

EF-27

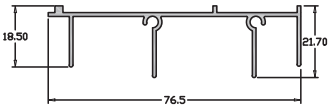

EF-30

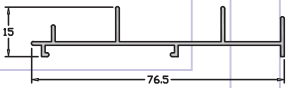

D-30

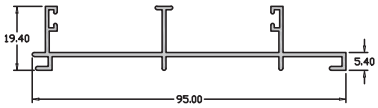

D-27

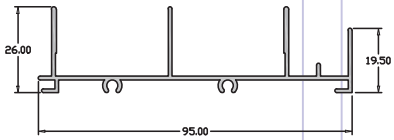

EF-26

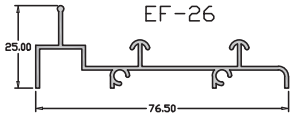

chawla aluminium

Fix & Openable Windows Sections

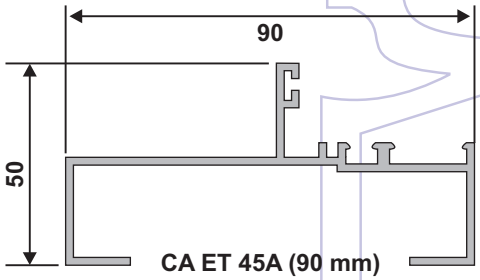

CA ET 45A (90 mm)

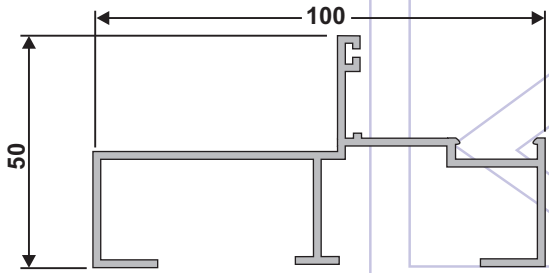

CA ET 45A (100 mm)

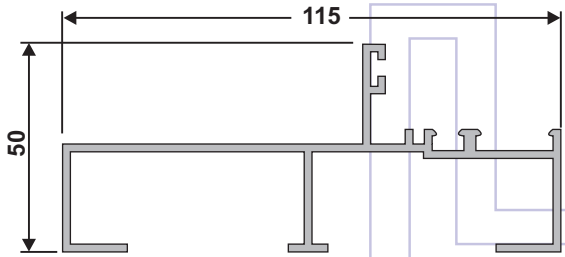

CA ET 45A (115 mm)

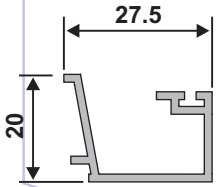

CA ET 41

chawla aluminium

Hinged Door Sections

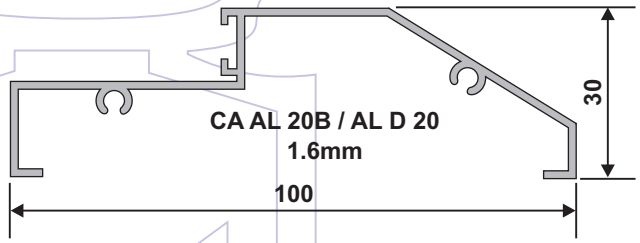

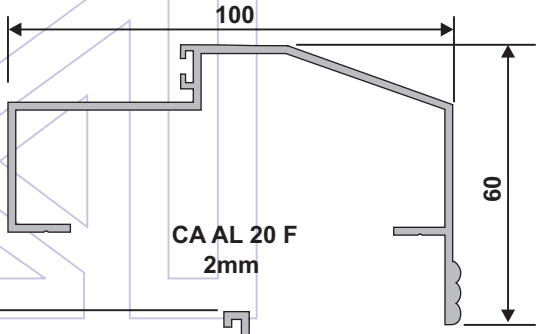

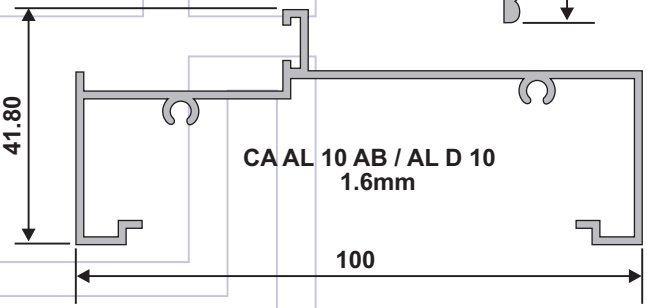

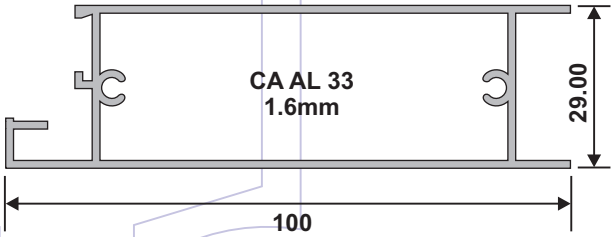

chawla aluminium

Hinged Door Sections

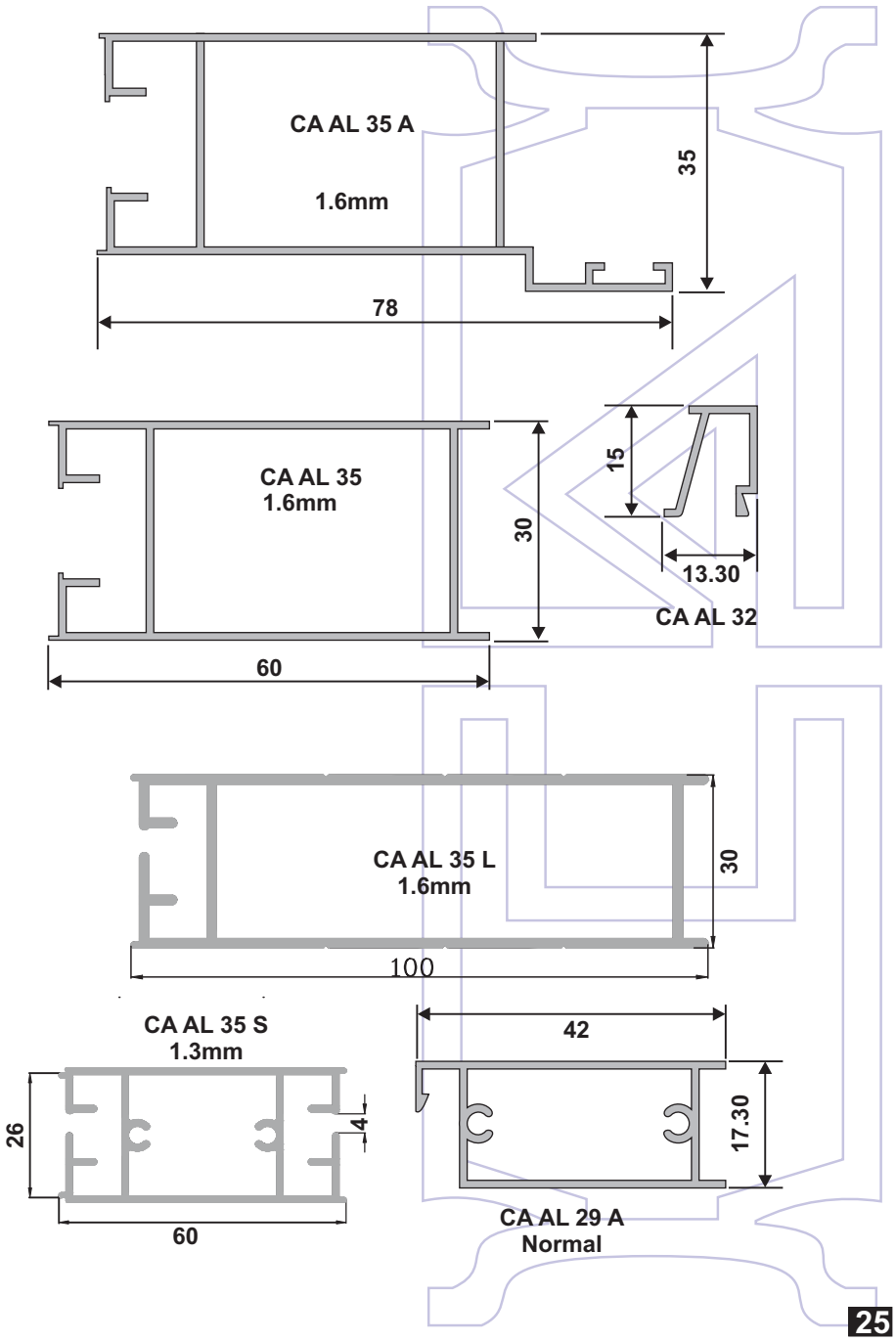

chawla aluminium

Economy Fix Glazing / Shop Front Sections

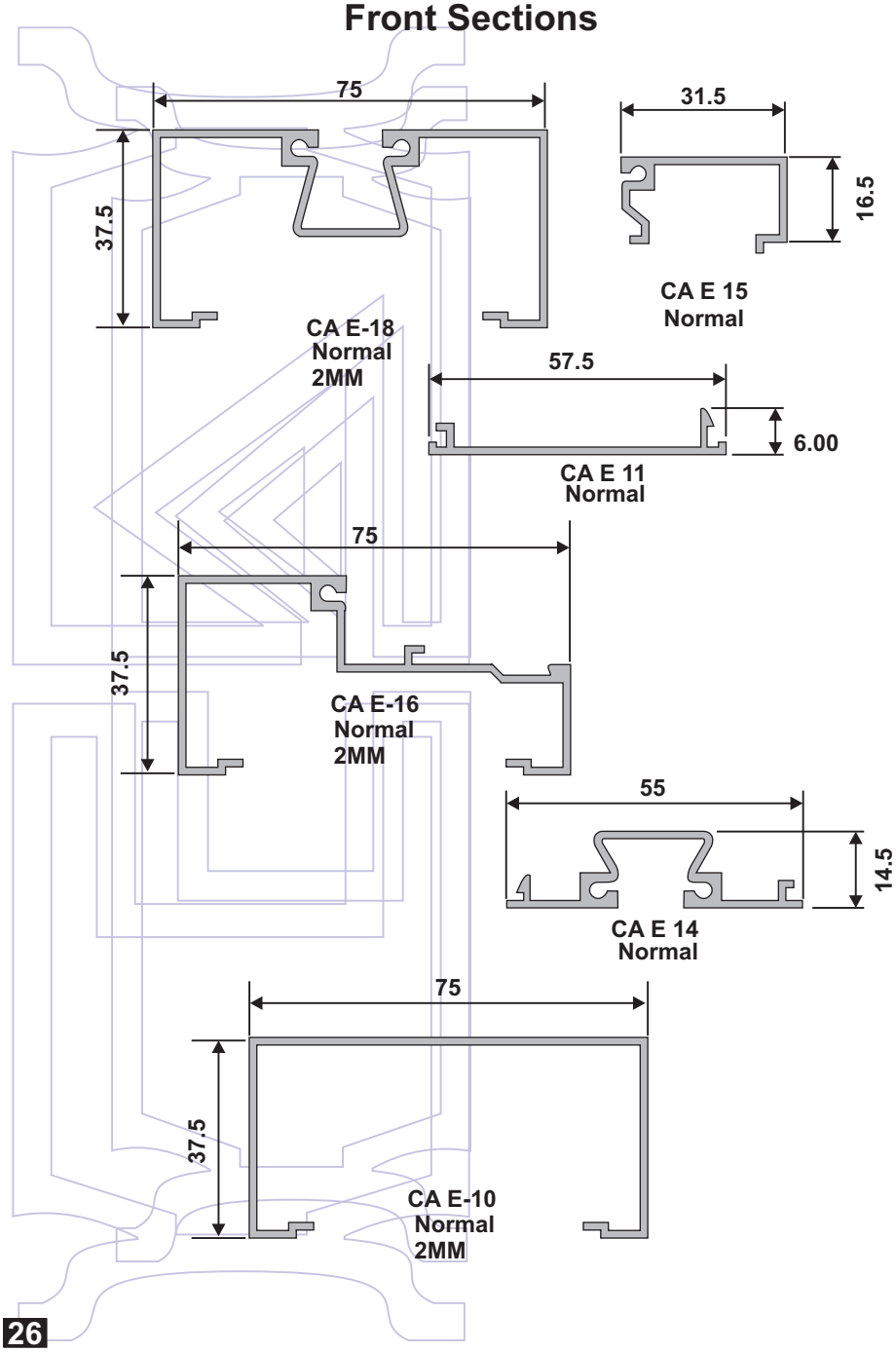

chawla aluminium

Double Glaze Sliding Door / Windows

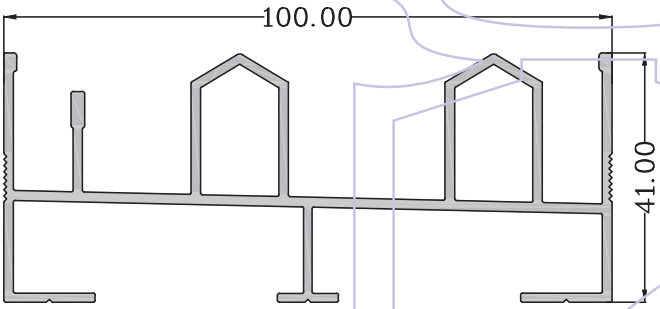

CA GSL 1-T
1.6 mm - 2 mm

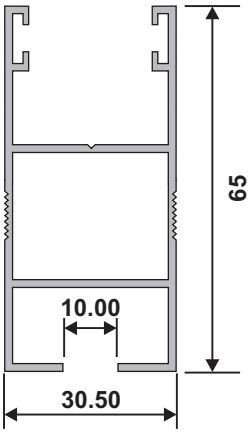

CA GSL 2
1.6 mm

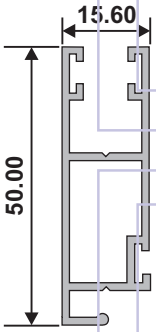

CA GSL 5
1.6 mm

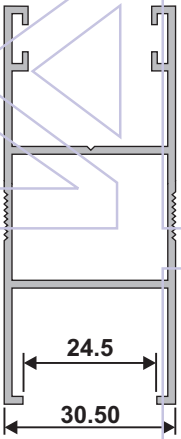

CA GSL 3
1.6 mm

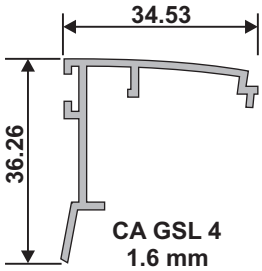

CA GSL 4
1.6 mm

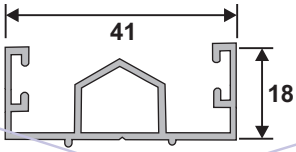

CA GSL 31

chawla aluminium

Double Glaze Sliding Door / Windows

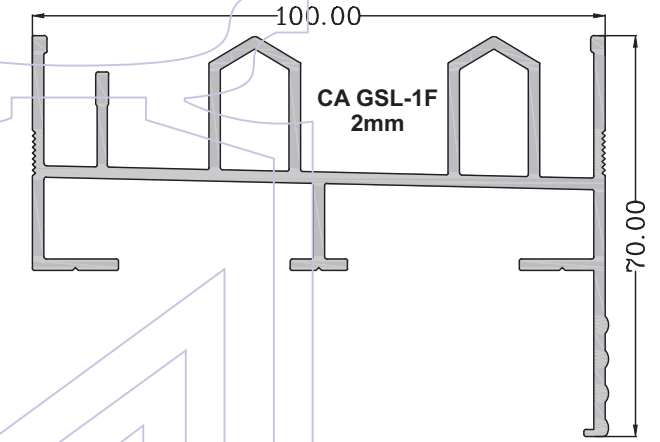

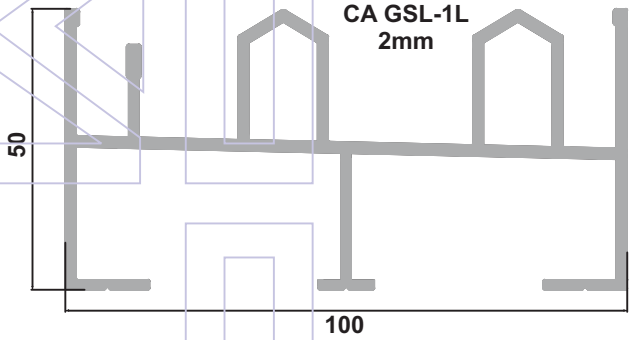

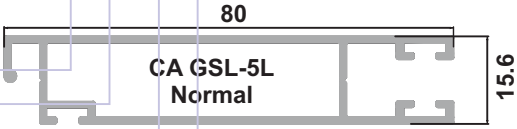

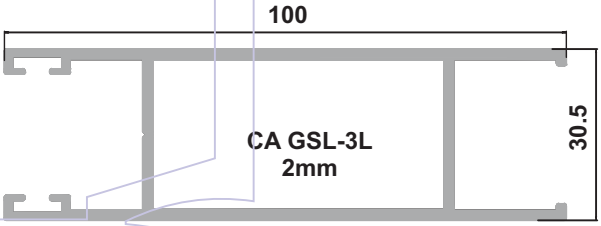

chawla aluminium

Executive Double Glaze Fix and Sliding Windows

CA GSPR-6
2mm

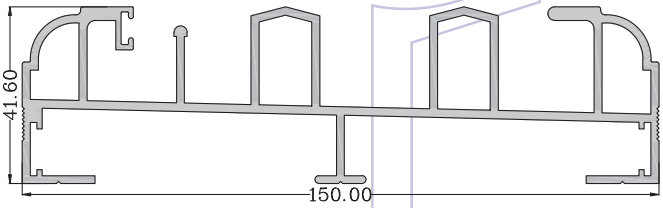

CA GSPR-17
1.6mm

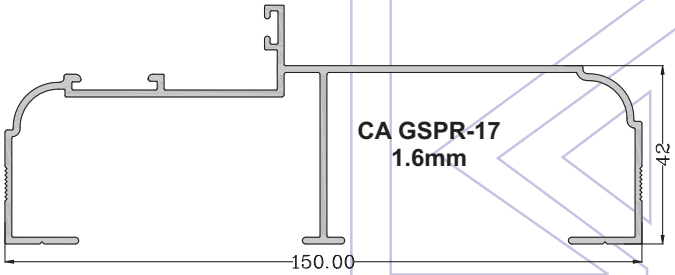

CA GSPR-1
2mm

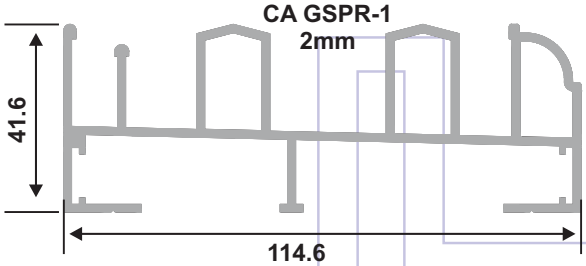

CA GSPR-16
2mm

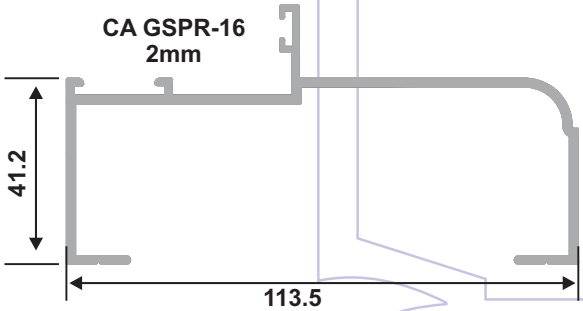

chawla aluminium

Economy Double Glaze

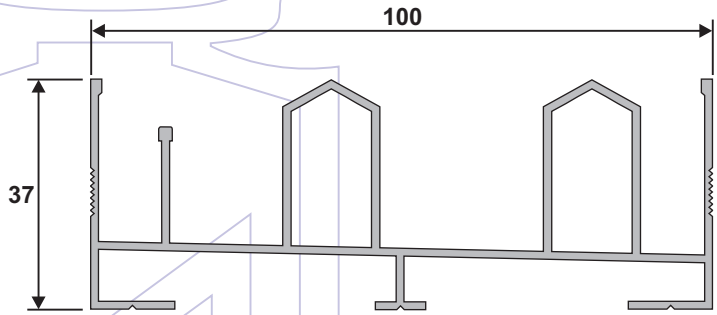

CA DG 26
Normal

CA DG 23A
Normal

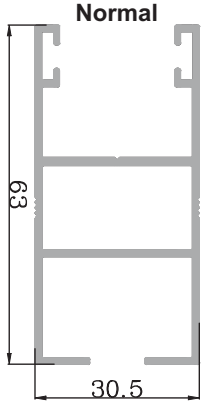

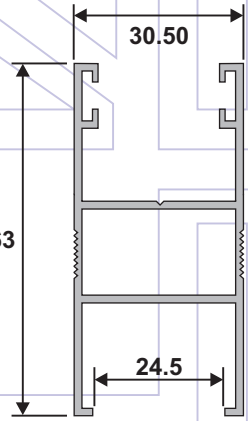

CA DG 23
Normal

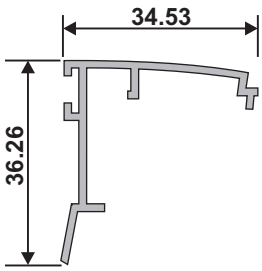

CA DG 28
Normal

chawla aluminium

Wood Aesthetics

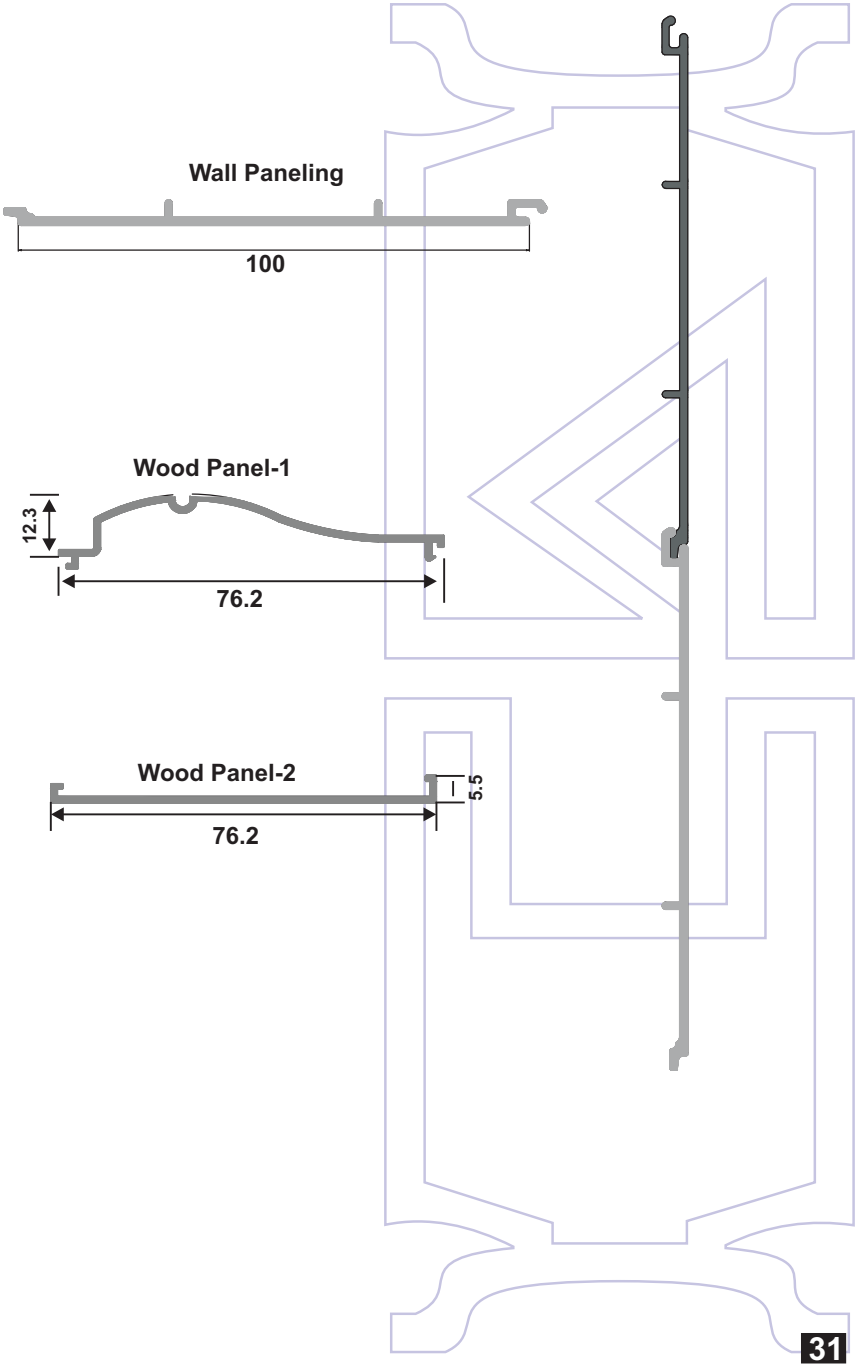

chawla aluminium

Fixed Double Glaze Windows

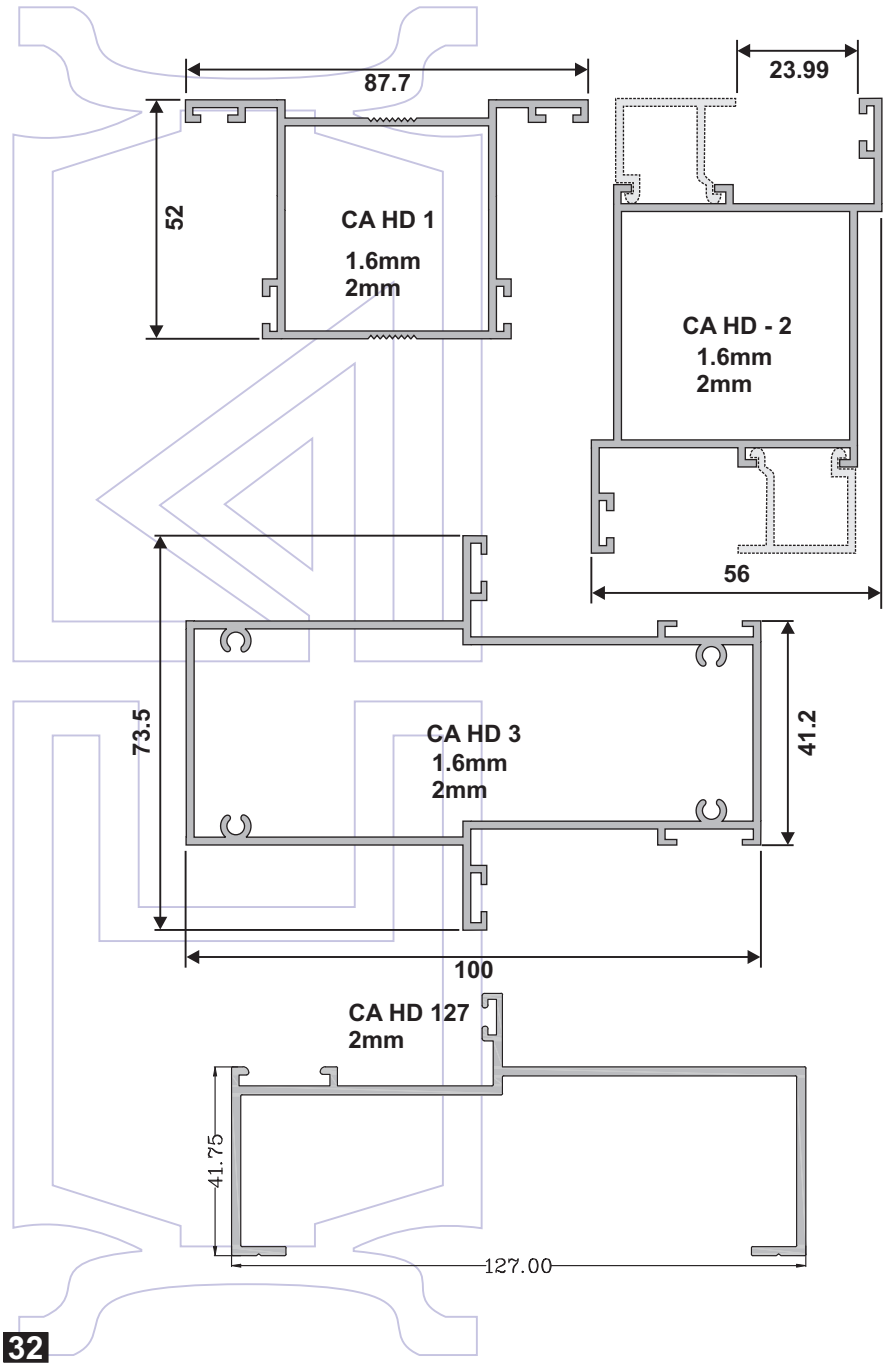

chawla aluminium

Fixed Double Glaze Windows

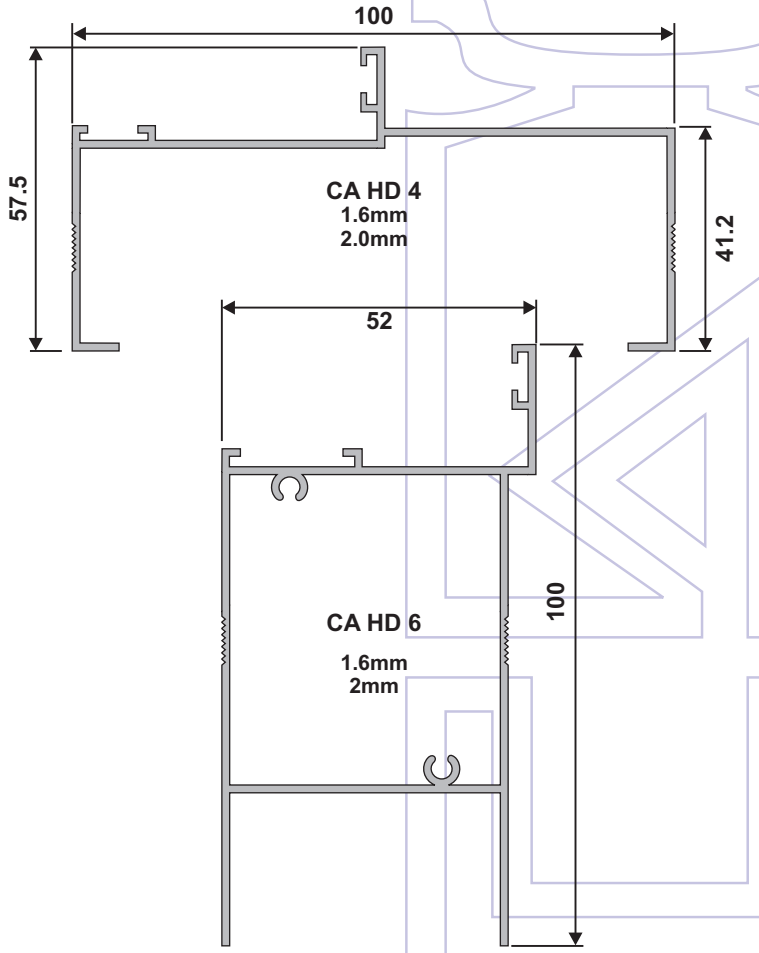

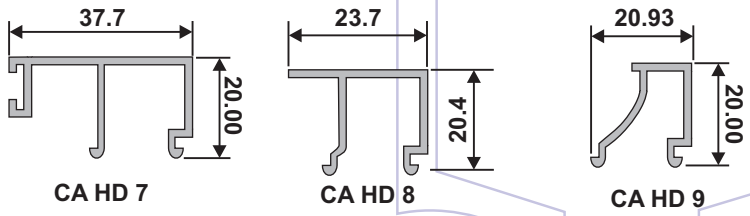

chawla aluminium

MRA Sections

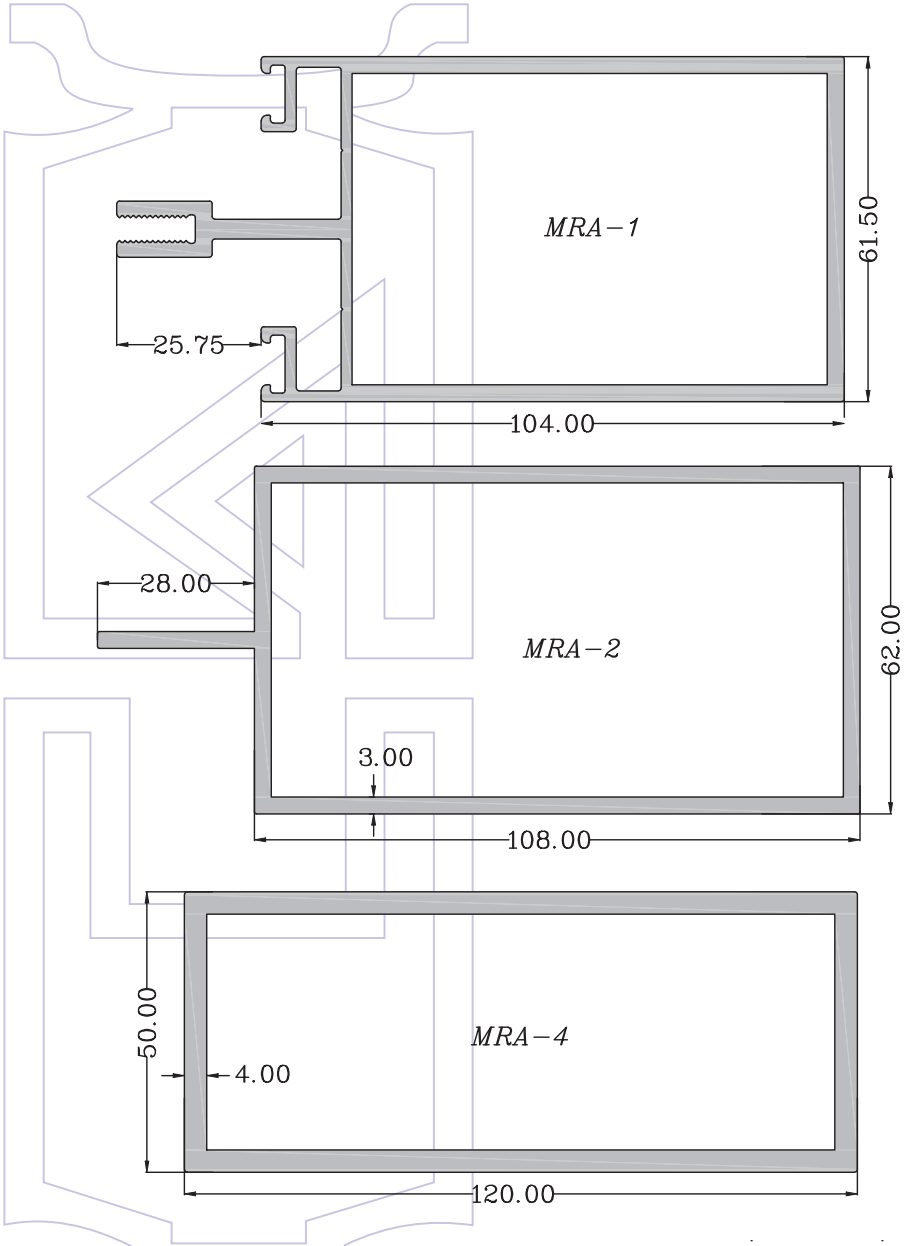

chawla aluminium

MRA Sections

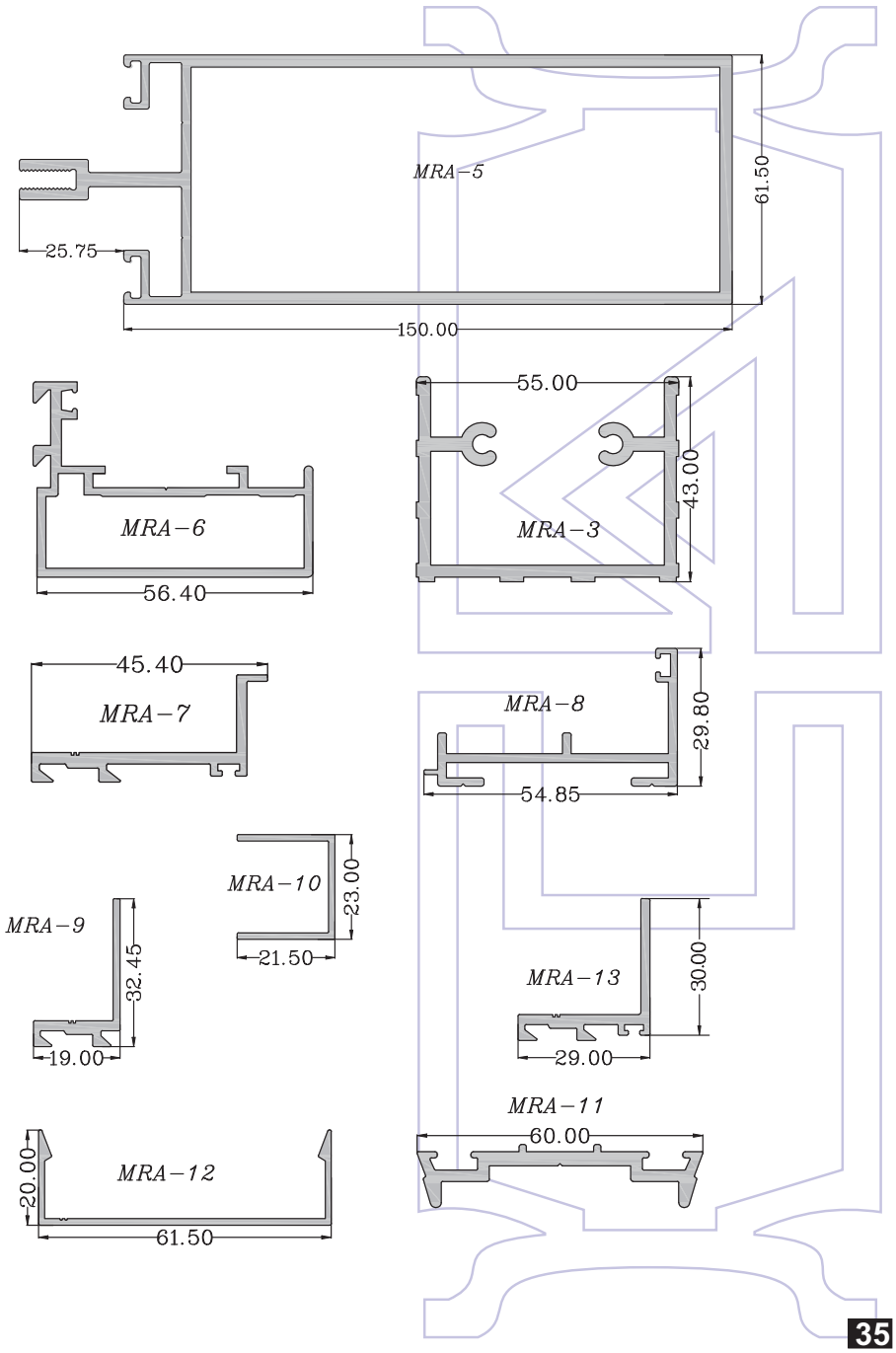

chawla aluminium

Curtain Wall Sections

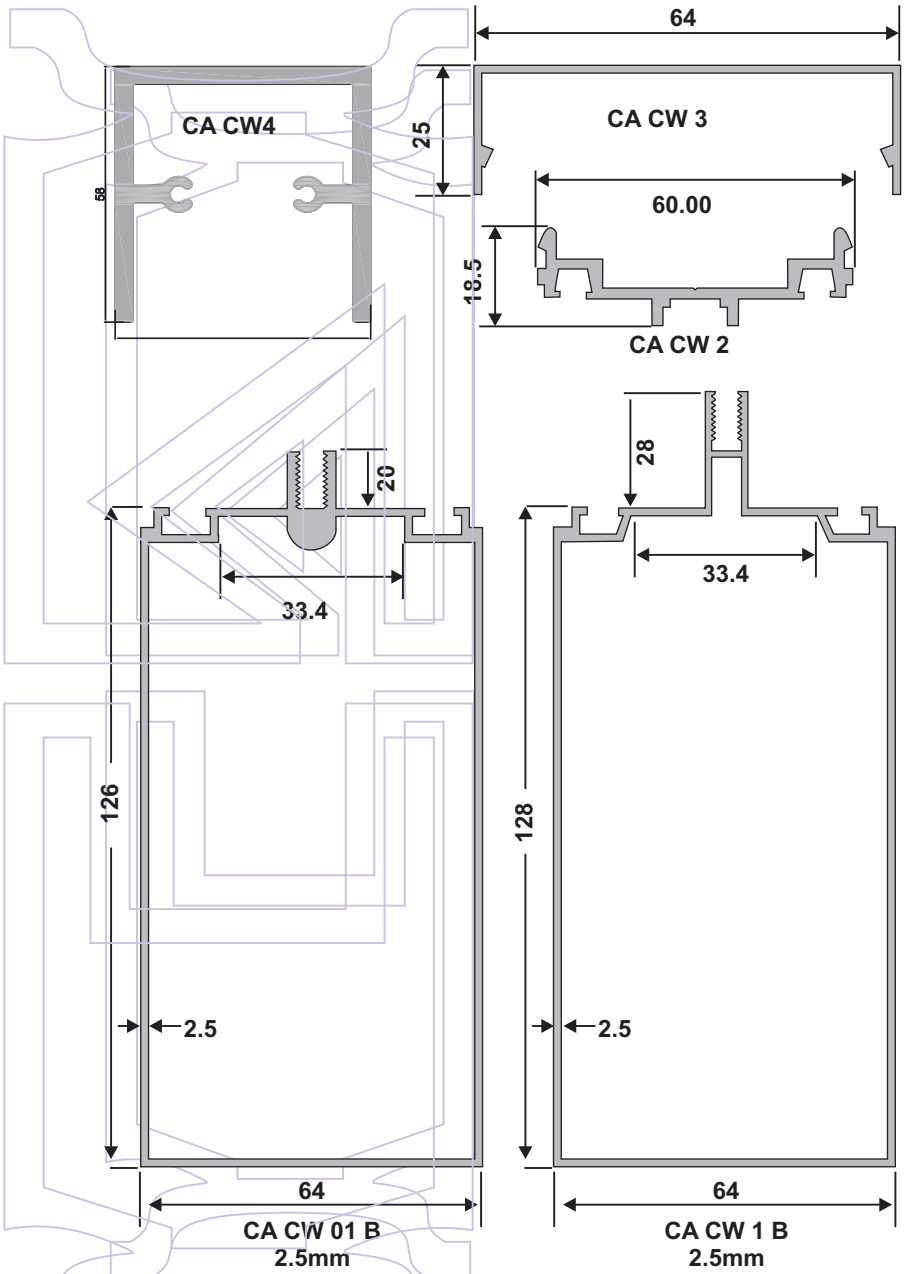

chawla aluminium

Curtain Wall Sections

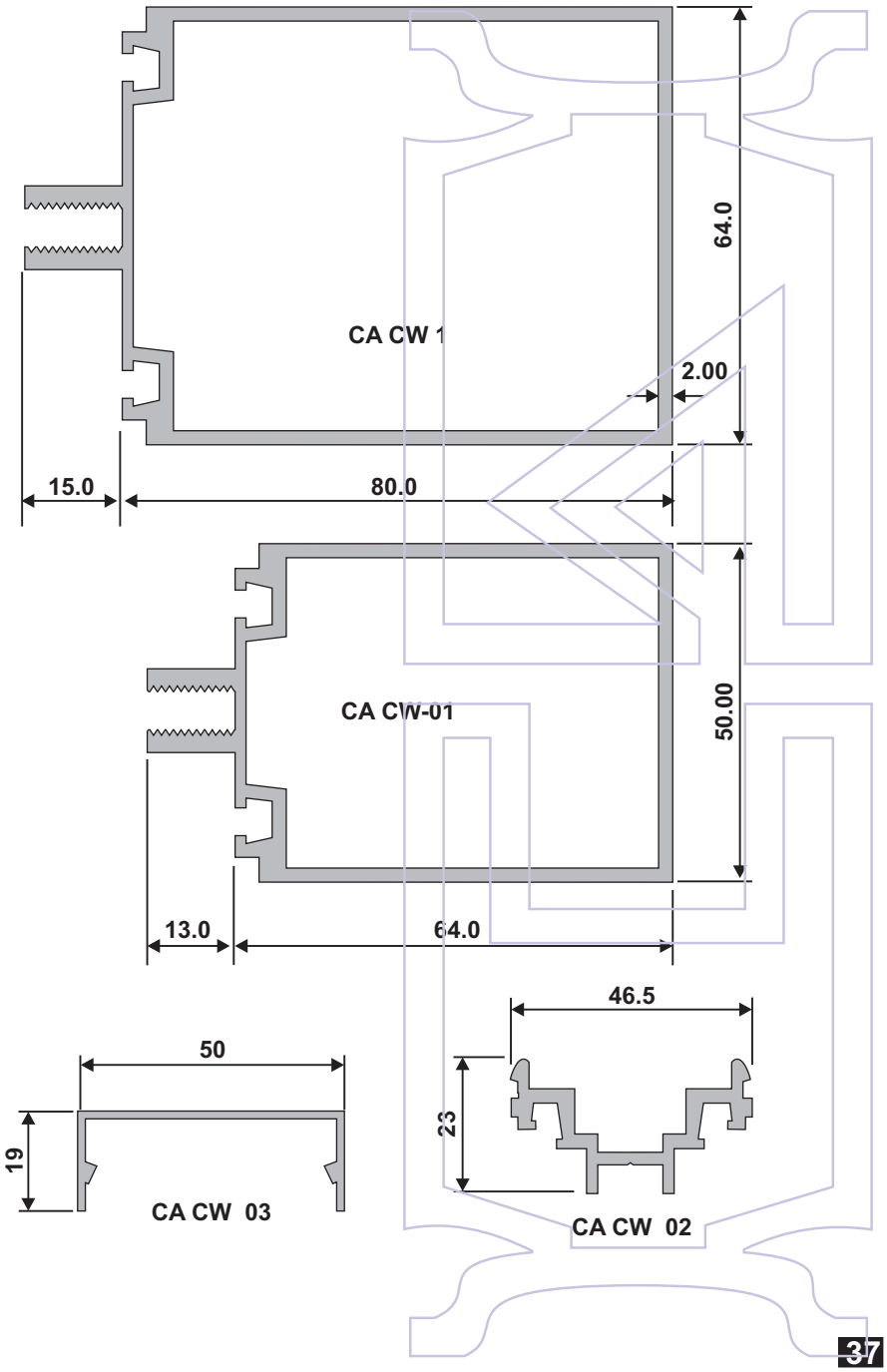

chawla aluminium

Curtain Wall Sections

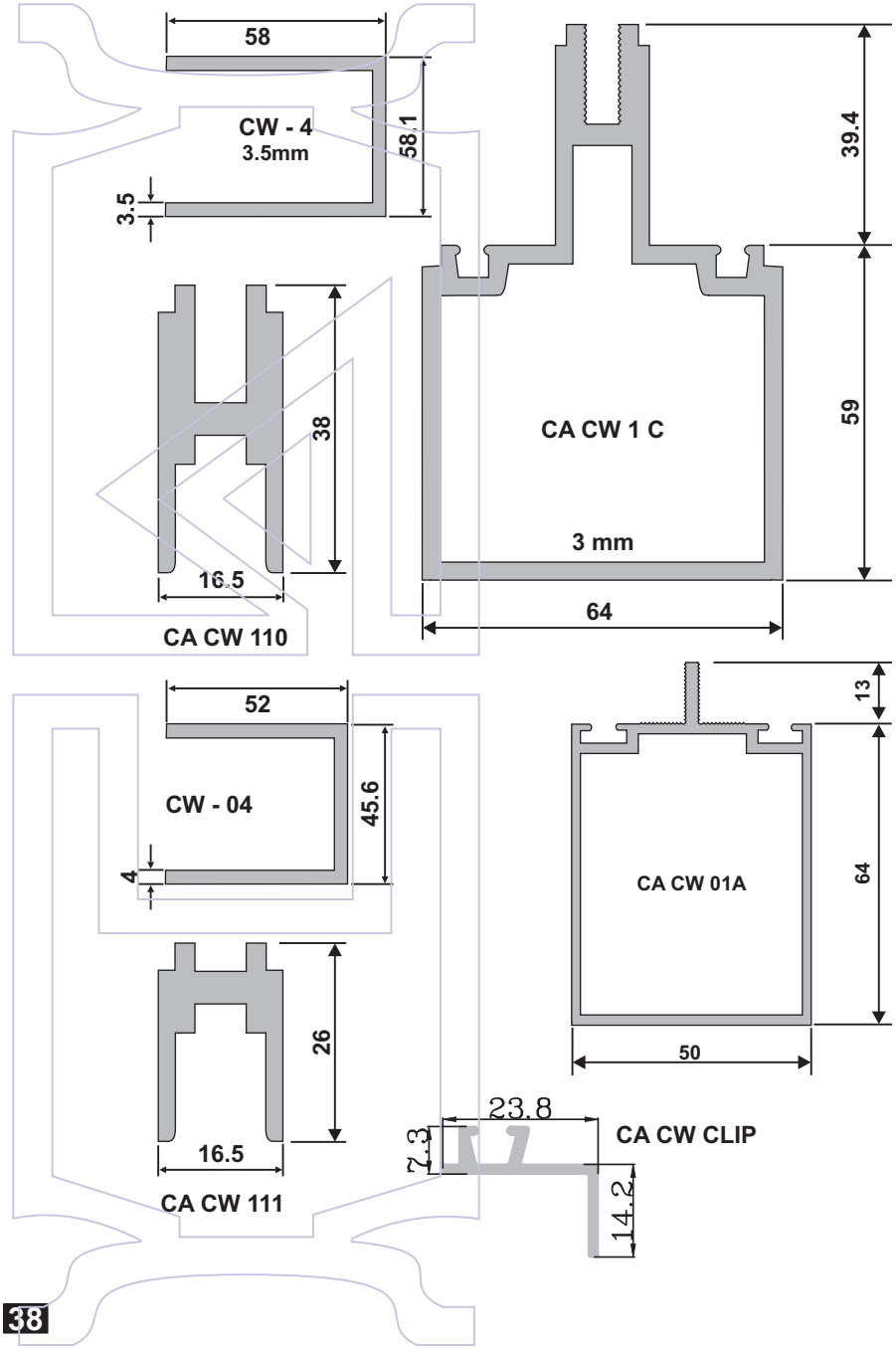

chawla aluminium

Curtain Wall Sections

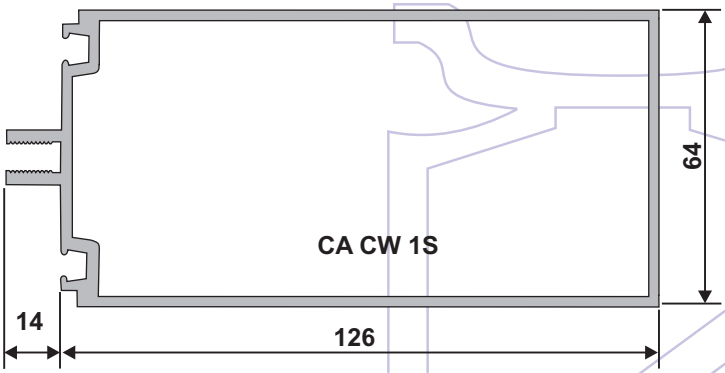

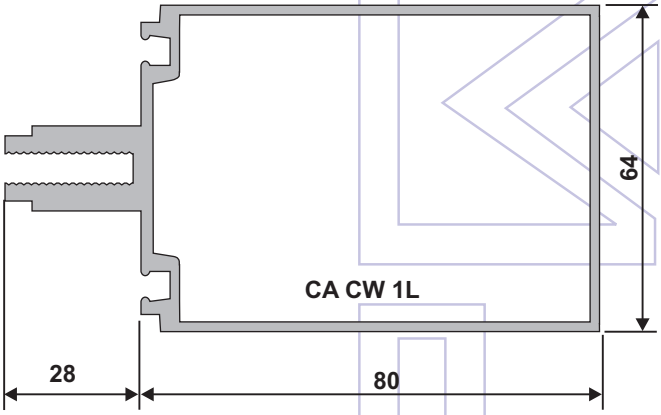

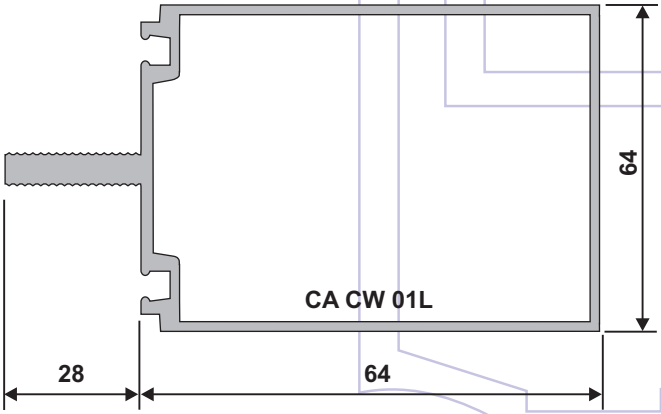

chawla aluminium

Executive Curtain Wall Sections

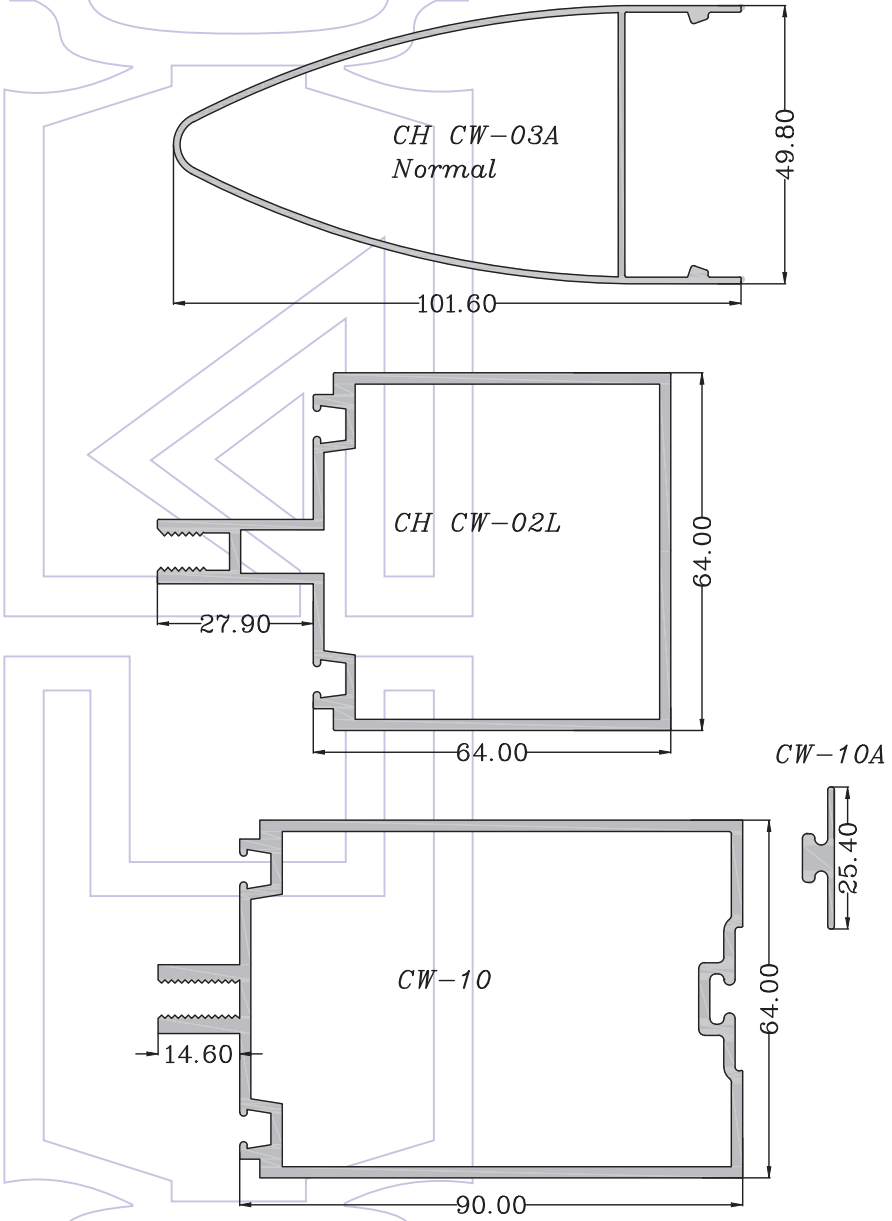

chawla aluminium

Structural Glazing

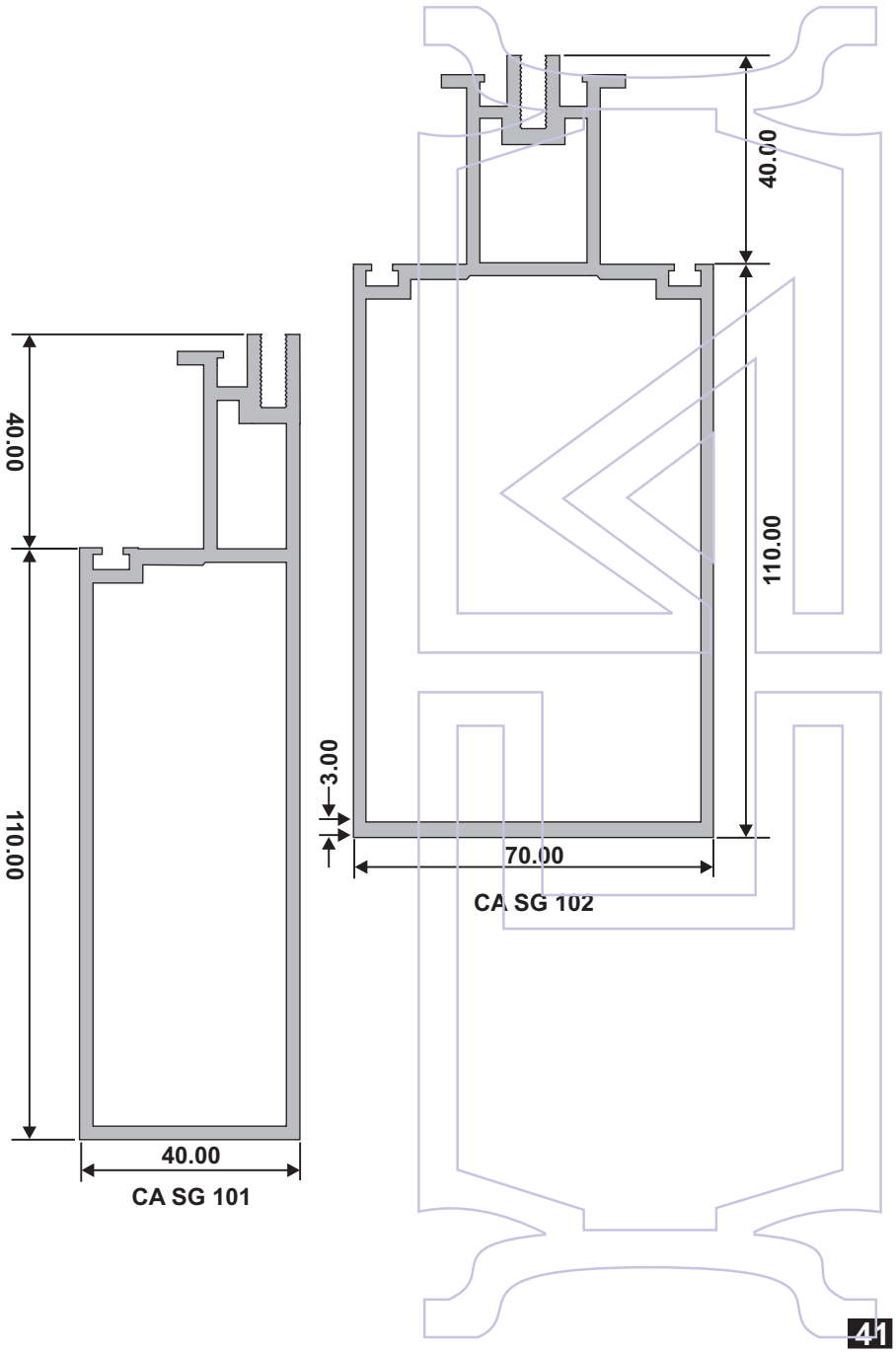

chawla aluminium

Structural Glazing

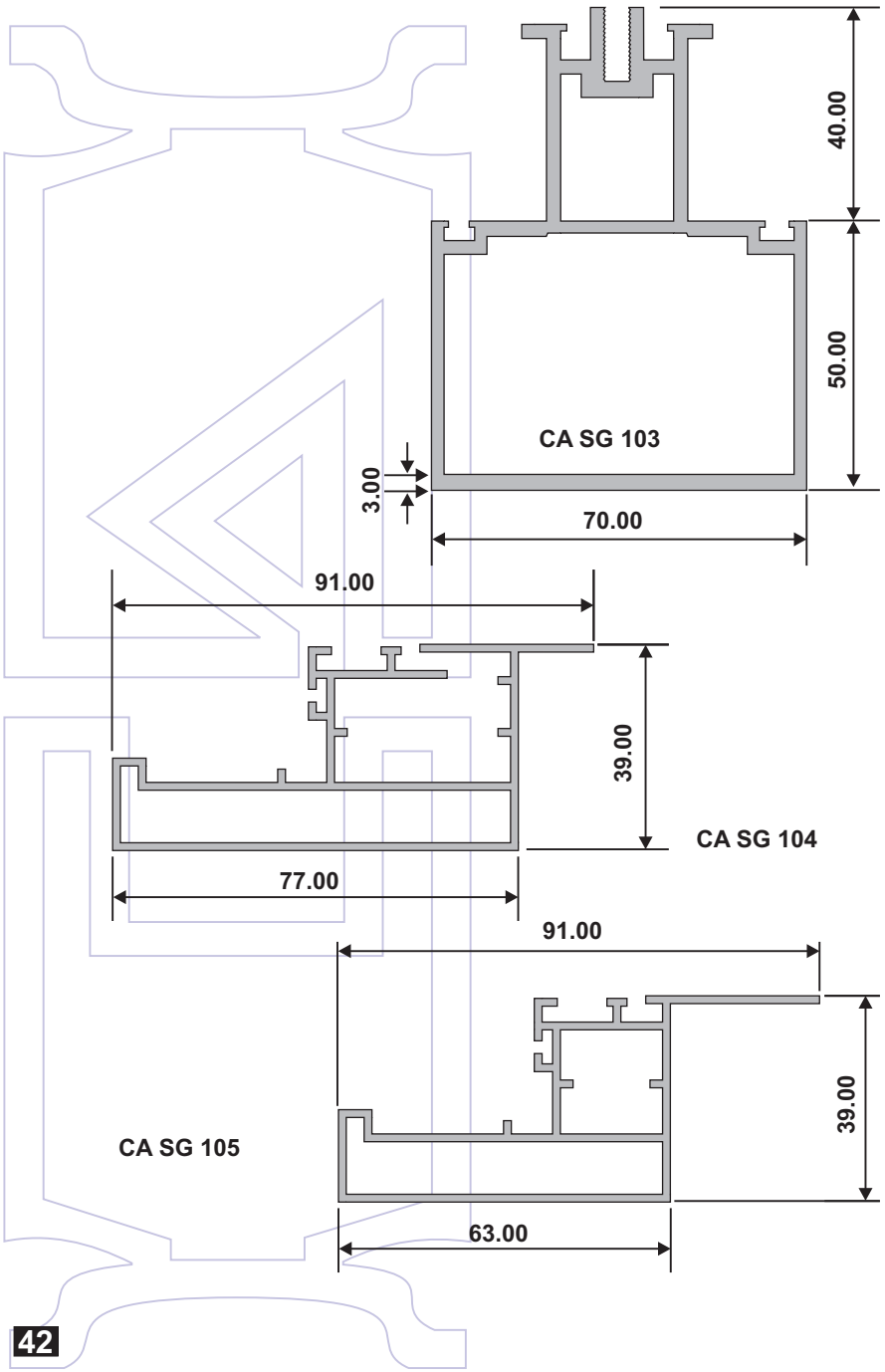

chawla aluminium

Structural Glazing

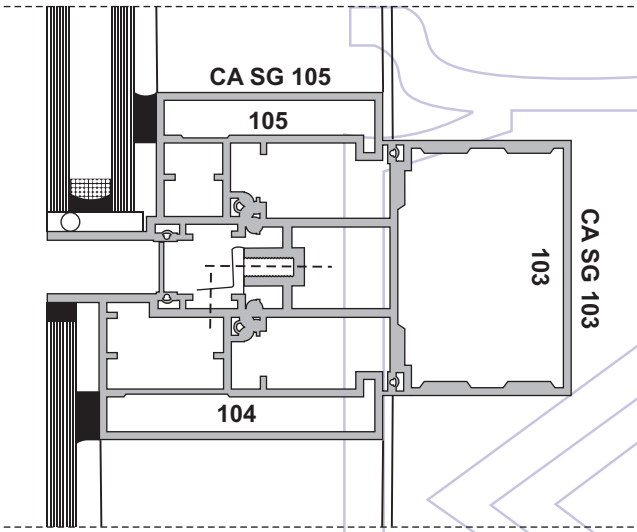

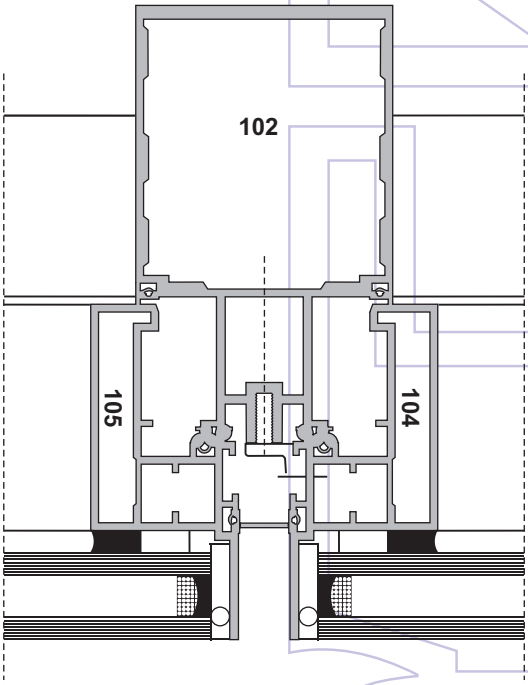

chawla aluminium

Structural Glazing

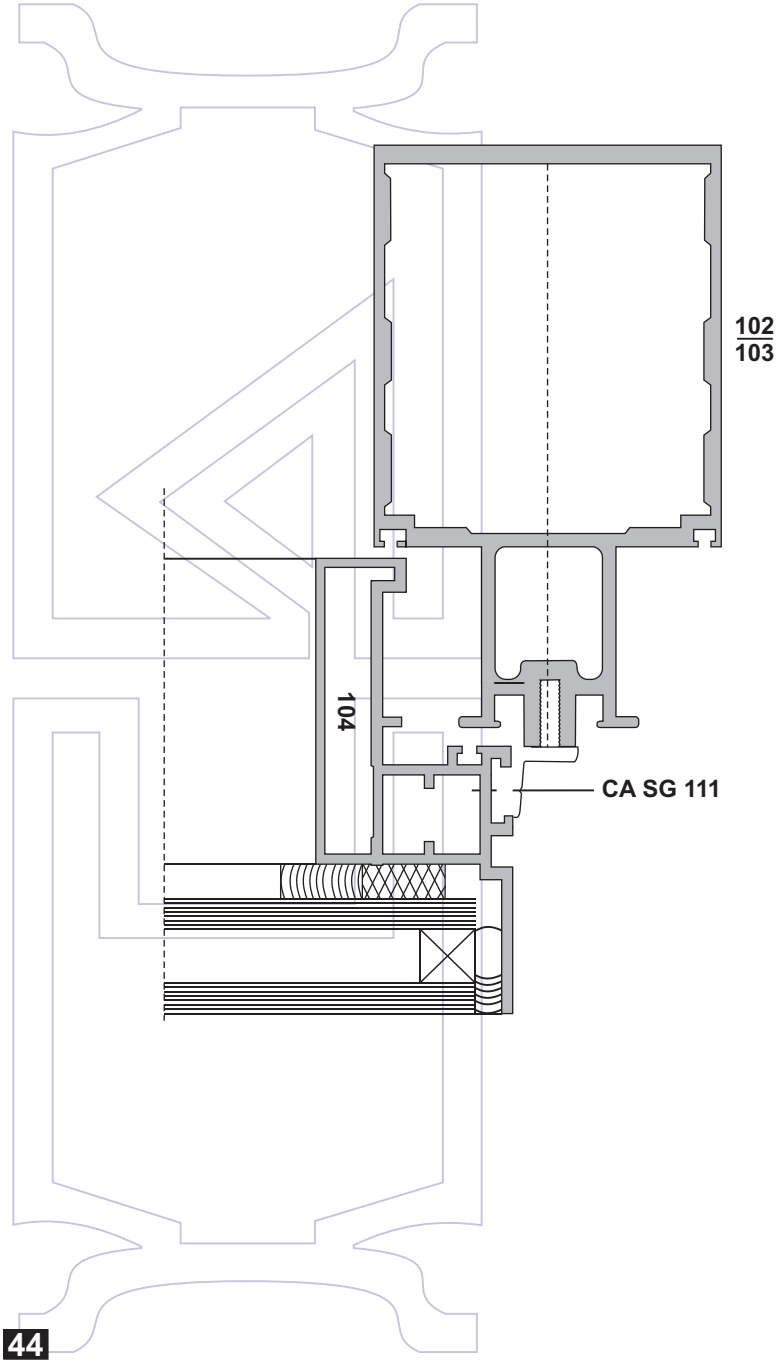

chawla aluminium

Structural Glazing

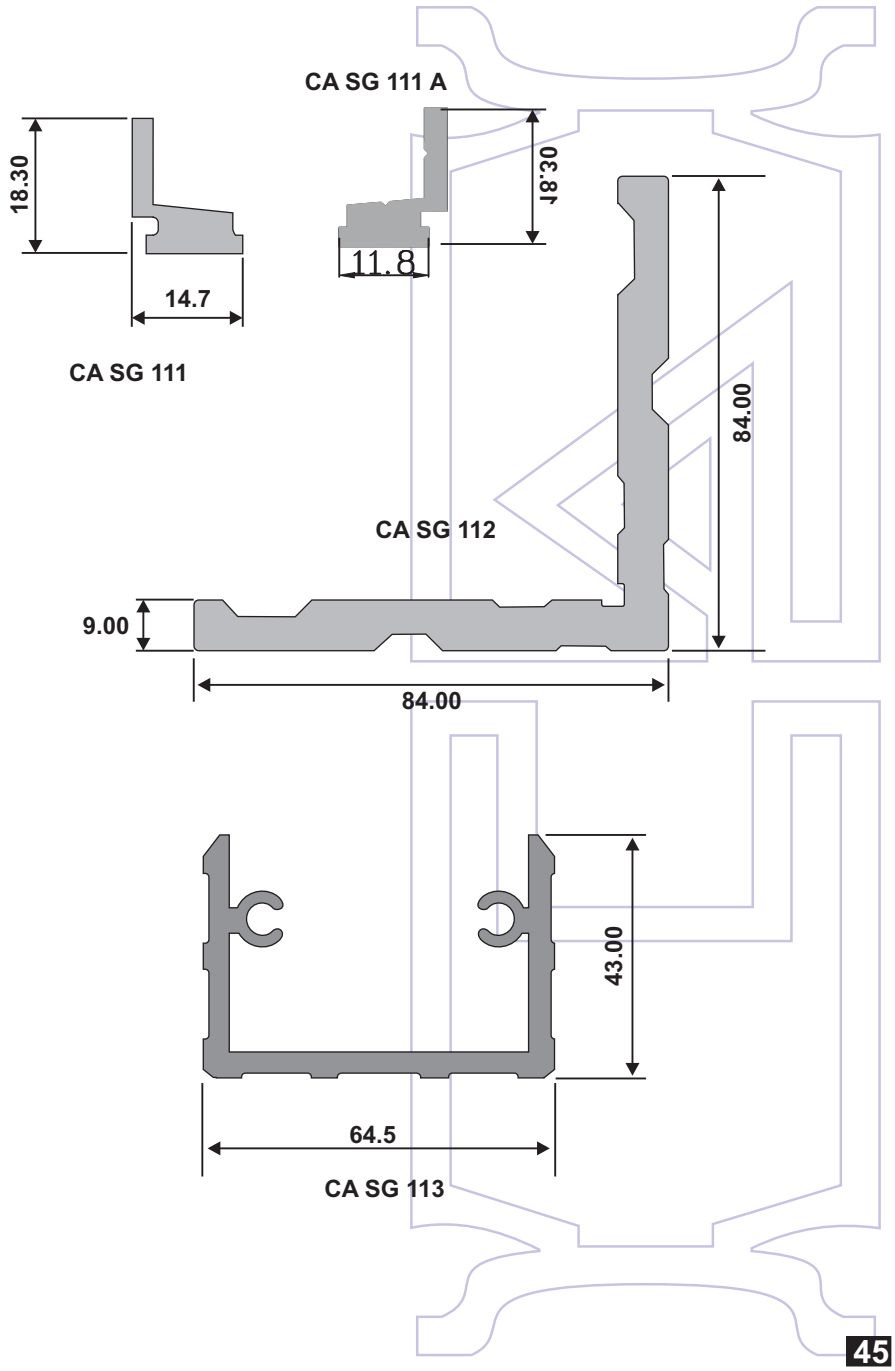

chawla aluminium

Miscellaneous

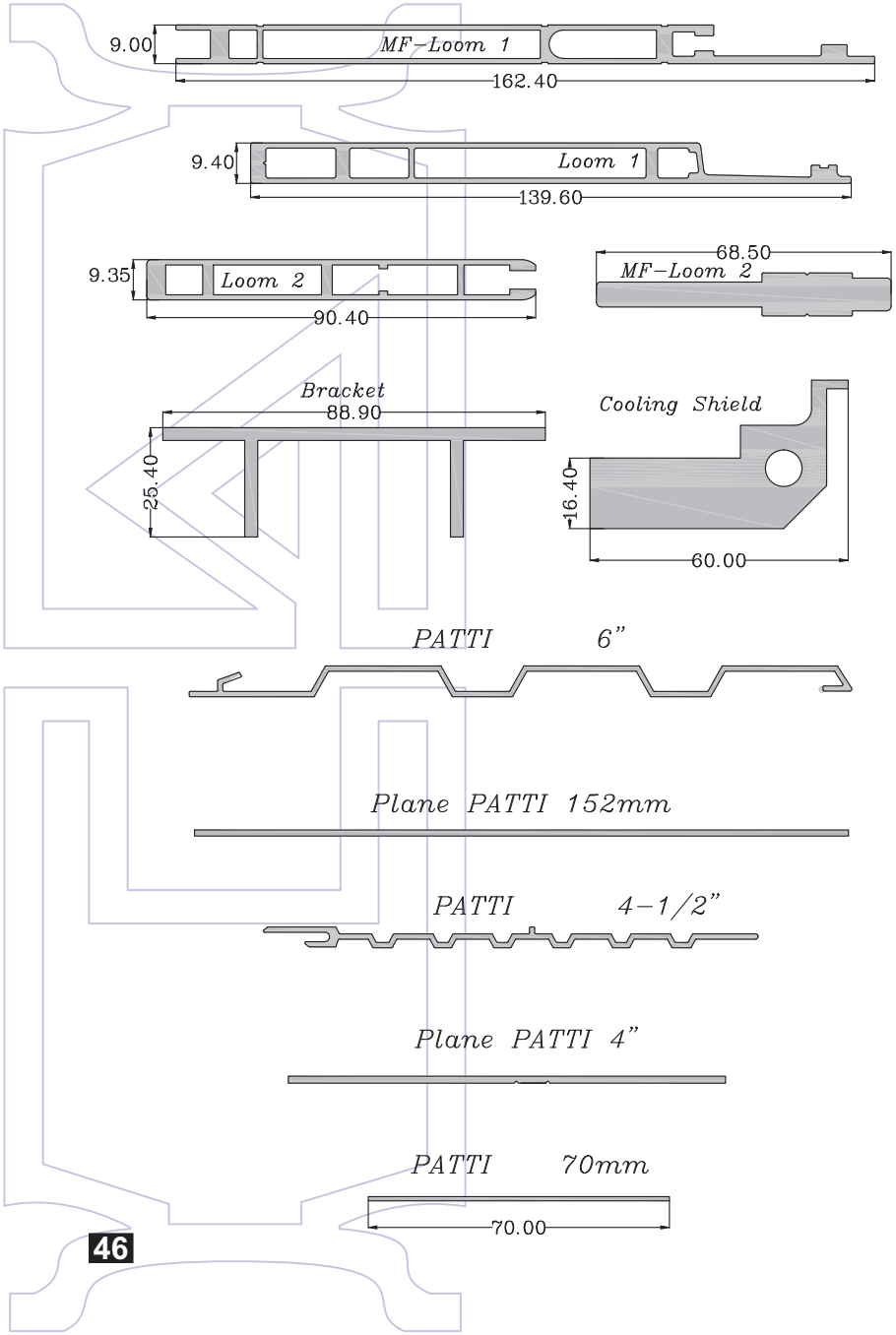

chawla aluminium

Miscellaneous

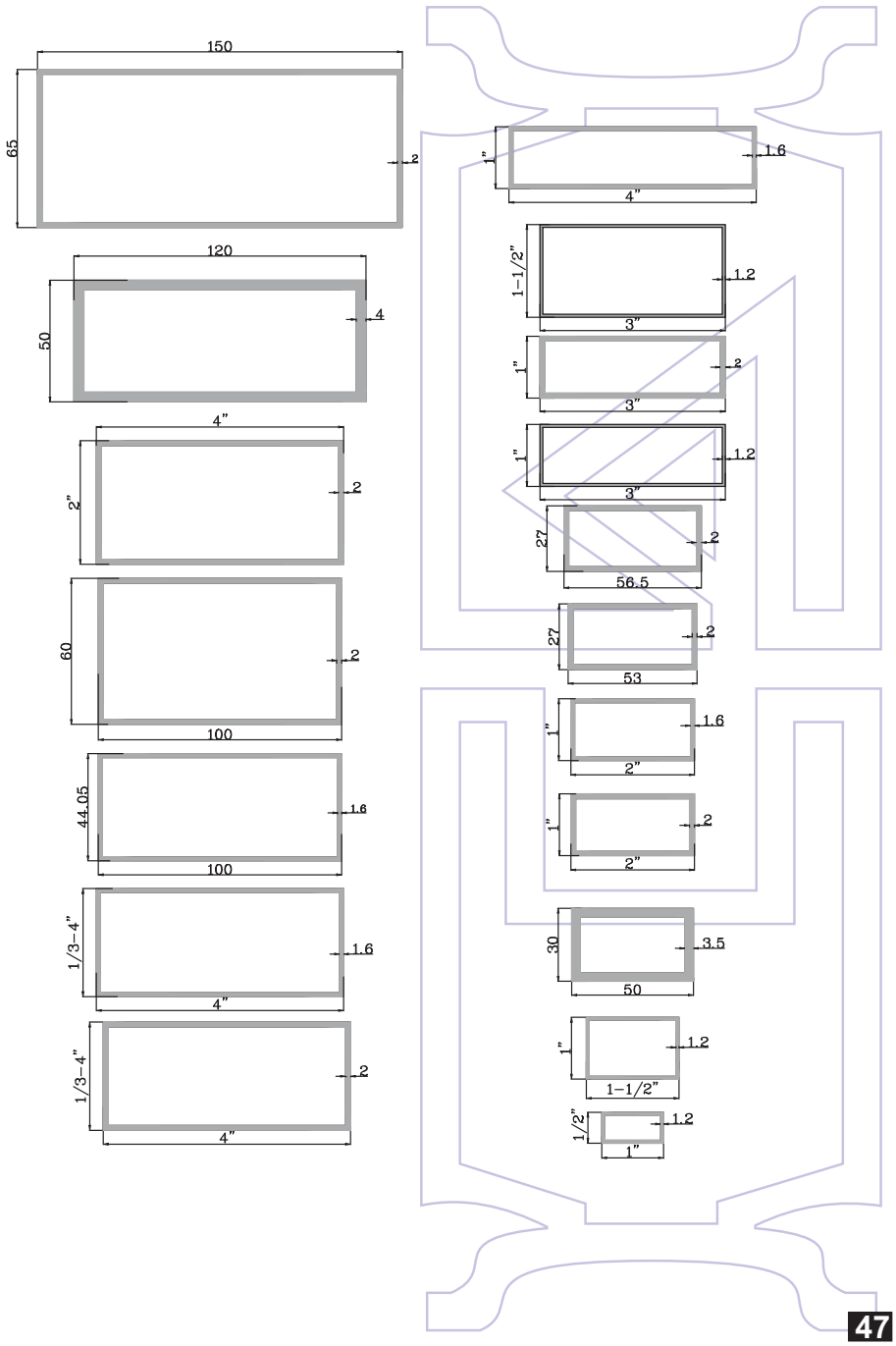

chawla aluminium

Miscellaneous

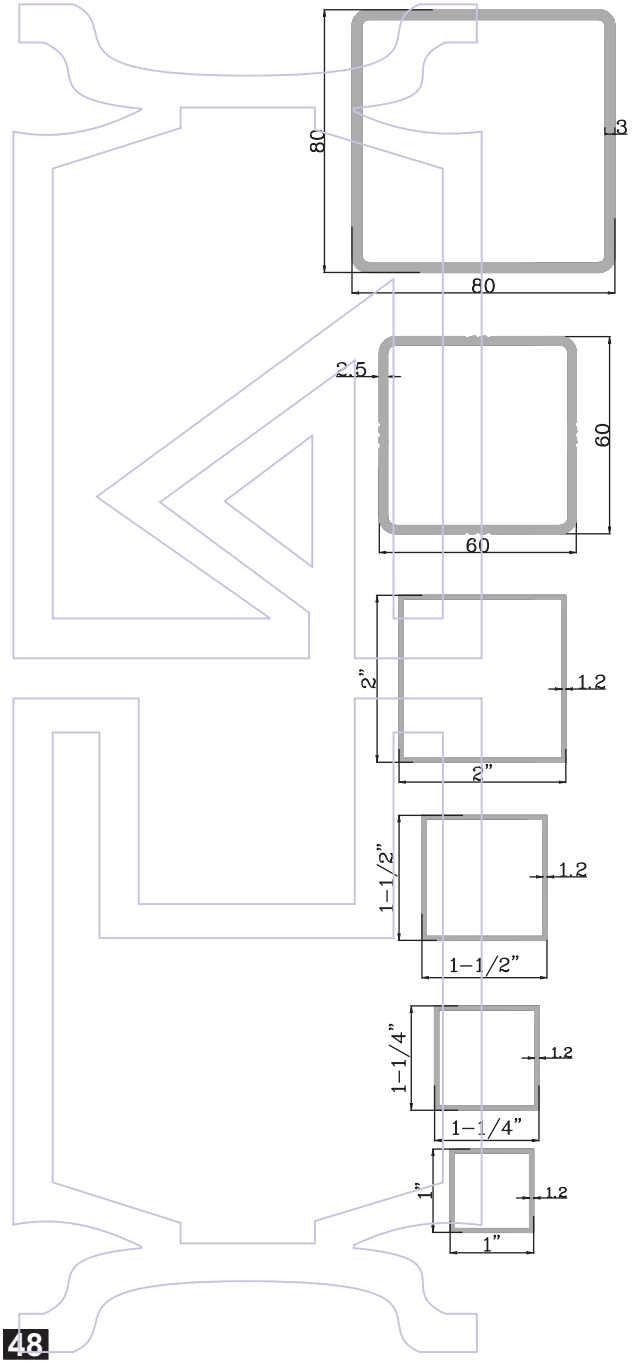

chawla aluminium

Miscellaneous

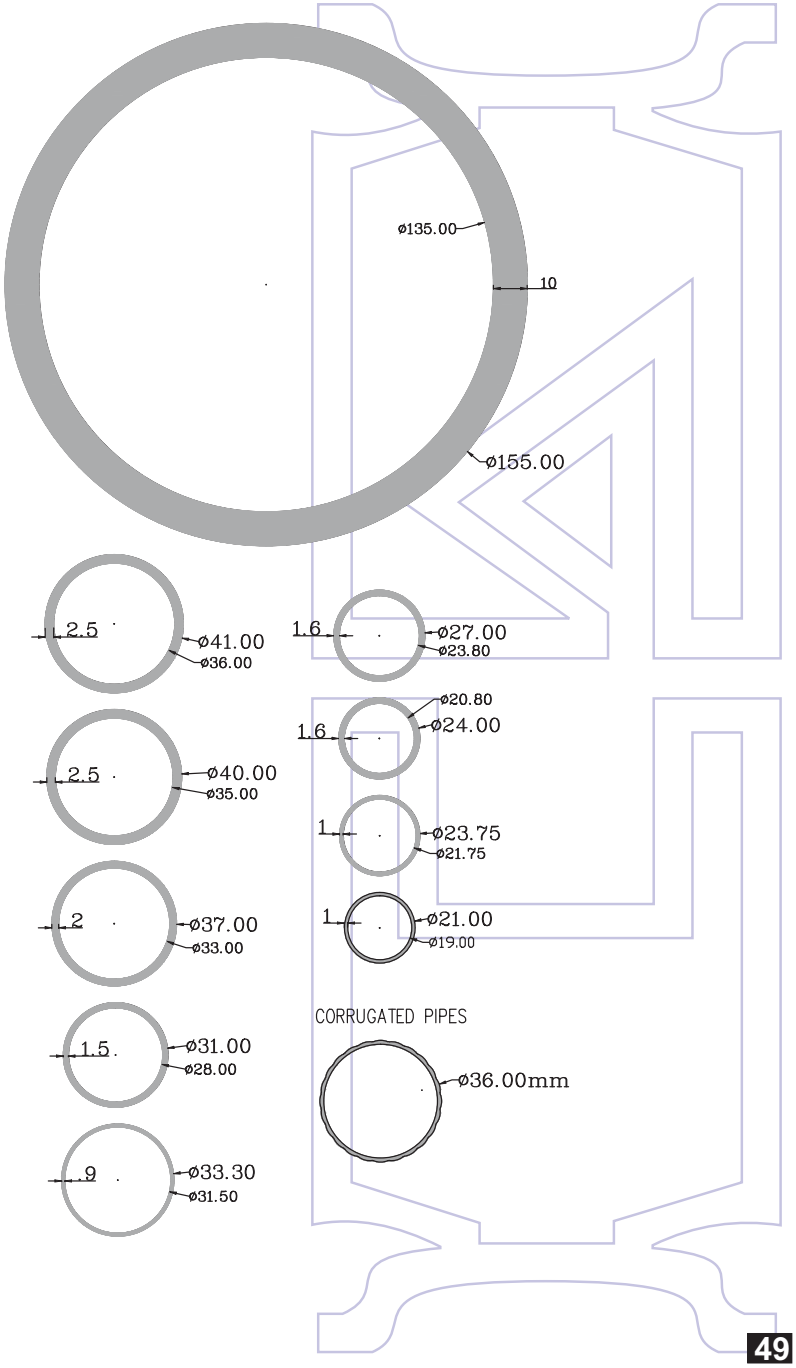

chawla aluminium

Miscellaneous

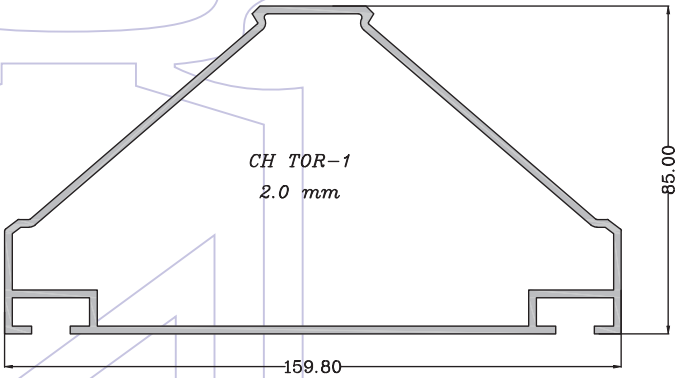

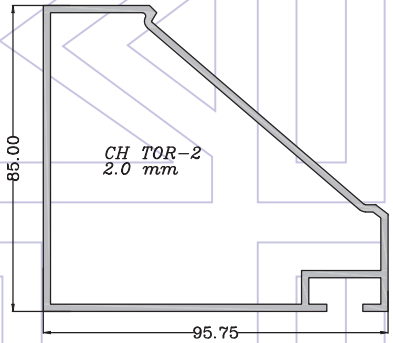

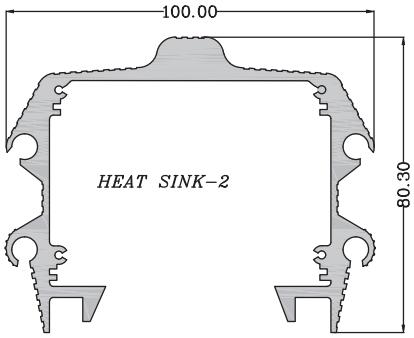

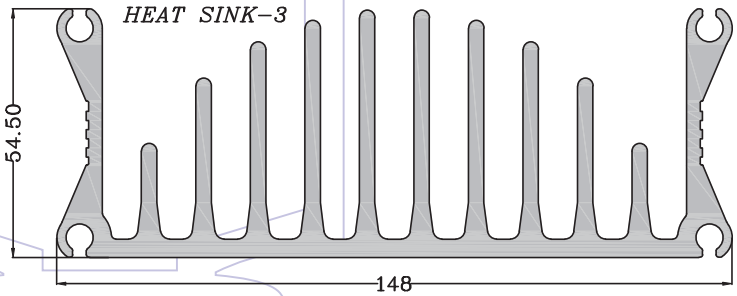

chawla aluminium

Miscellaneous

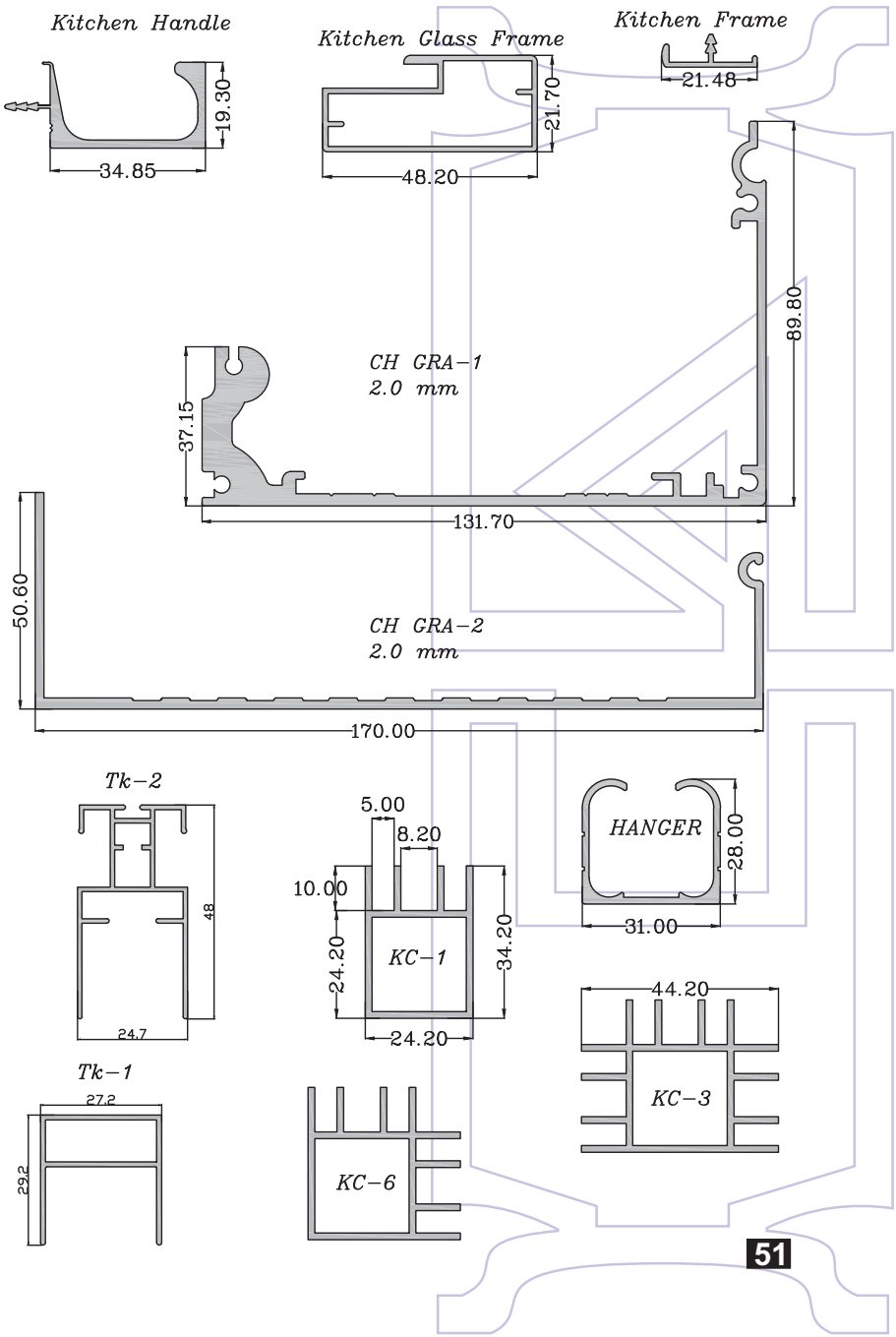

chawla aluminium

Miscellaneous

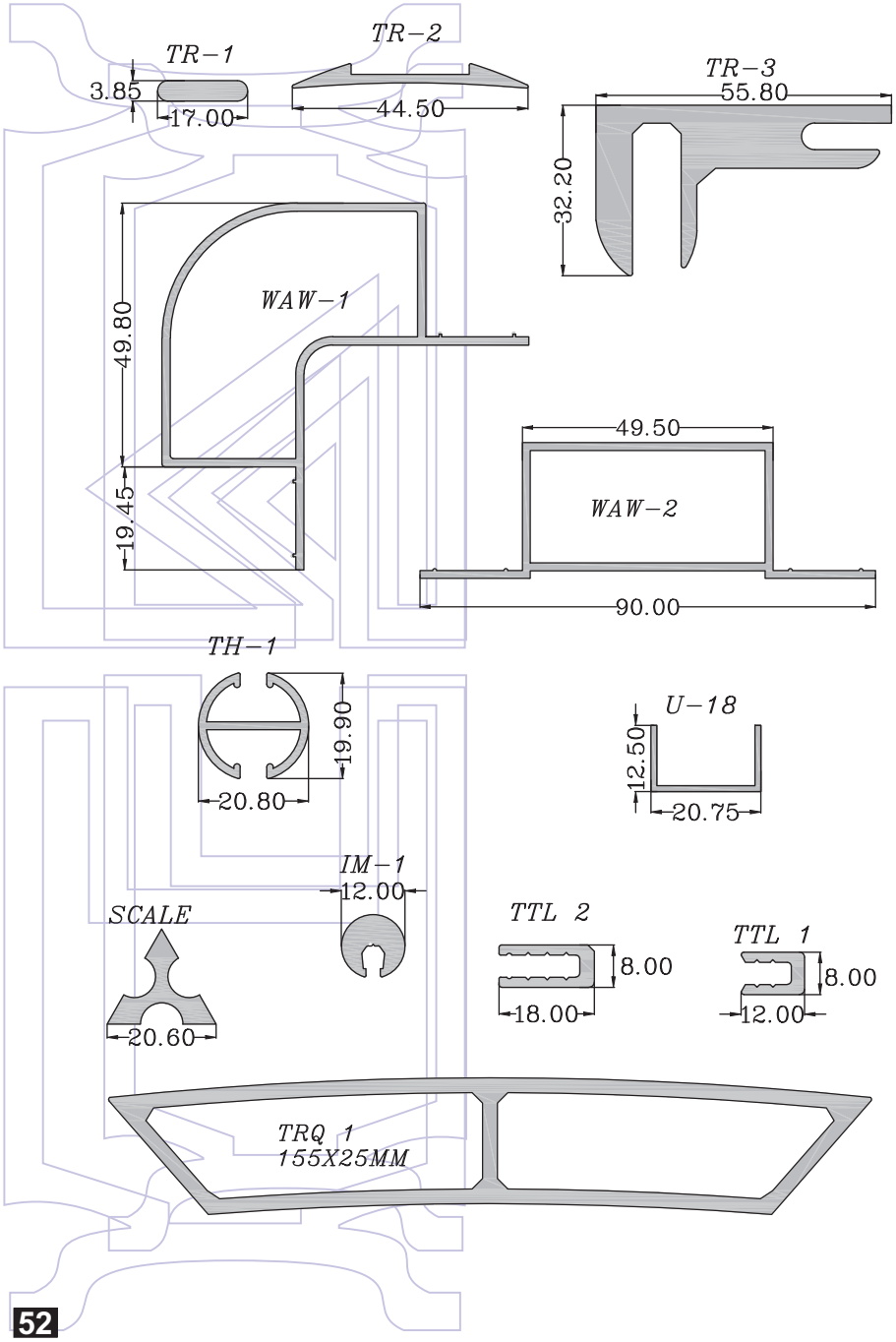

chawla aluminium

Miscellaneous

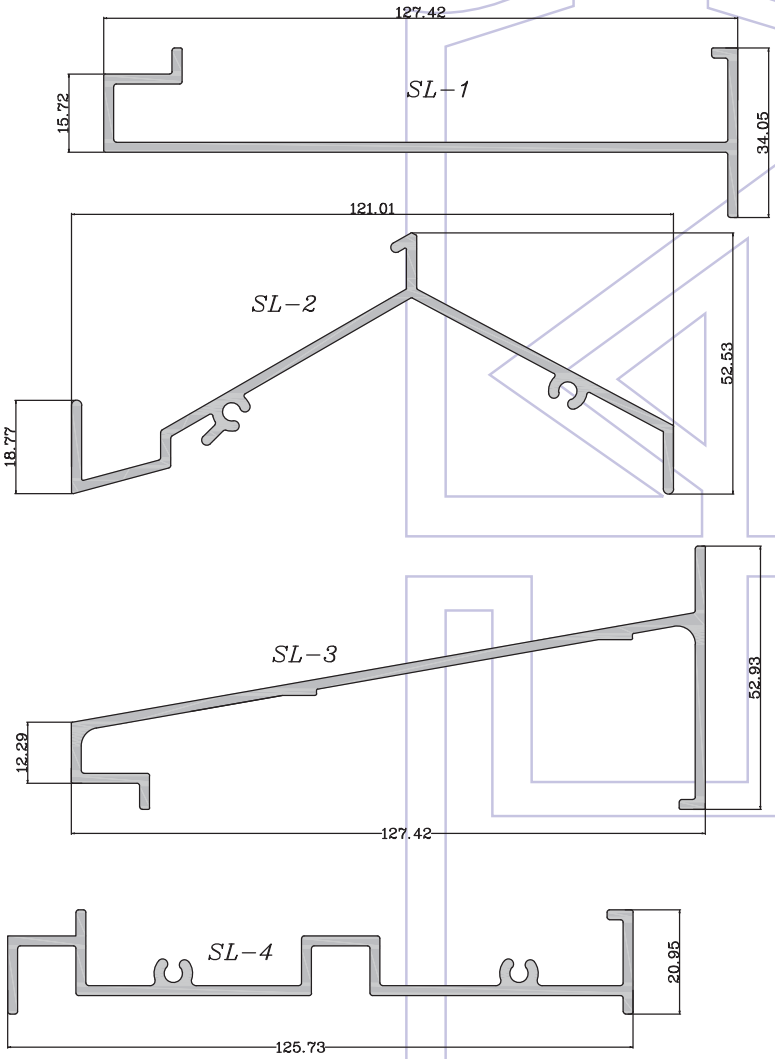

chawla aluminium

chawla aluminium

Miscellaneous

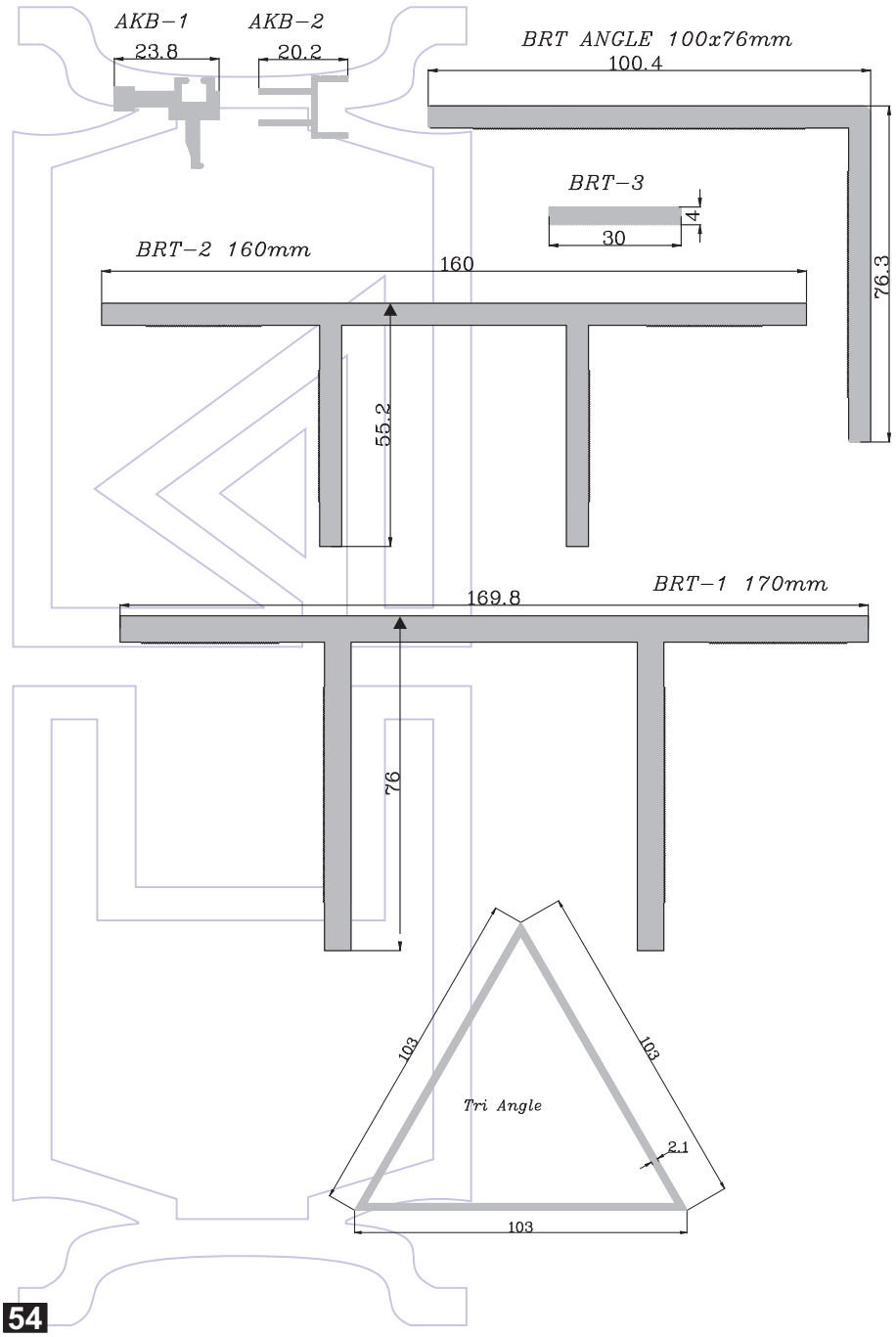

chawla aluminium

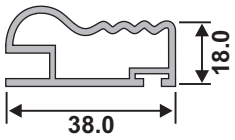

CA KT 4

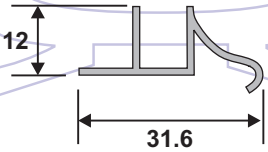

U per

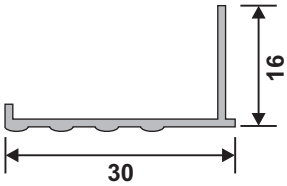

CA B 6

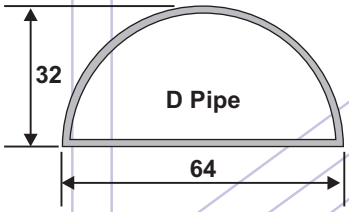

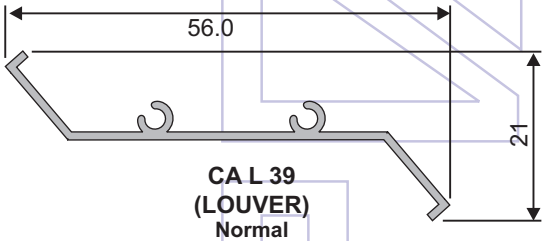

CA L 39
(LOUVER)
Normal

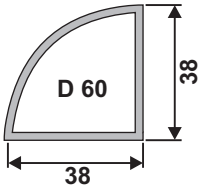

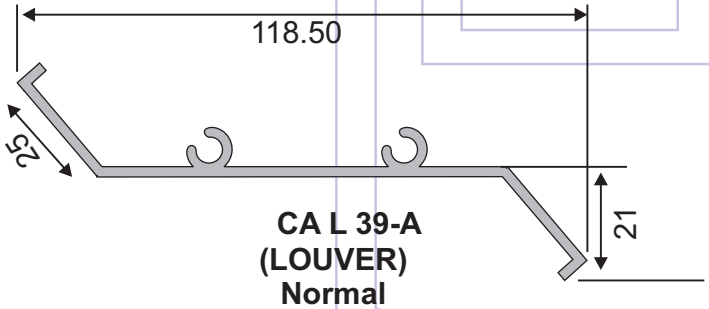

CA L 39-A
(LOUVER)
Normal

chawla aluminium

Miscellaneous

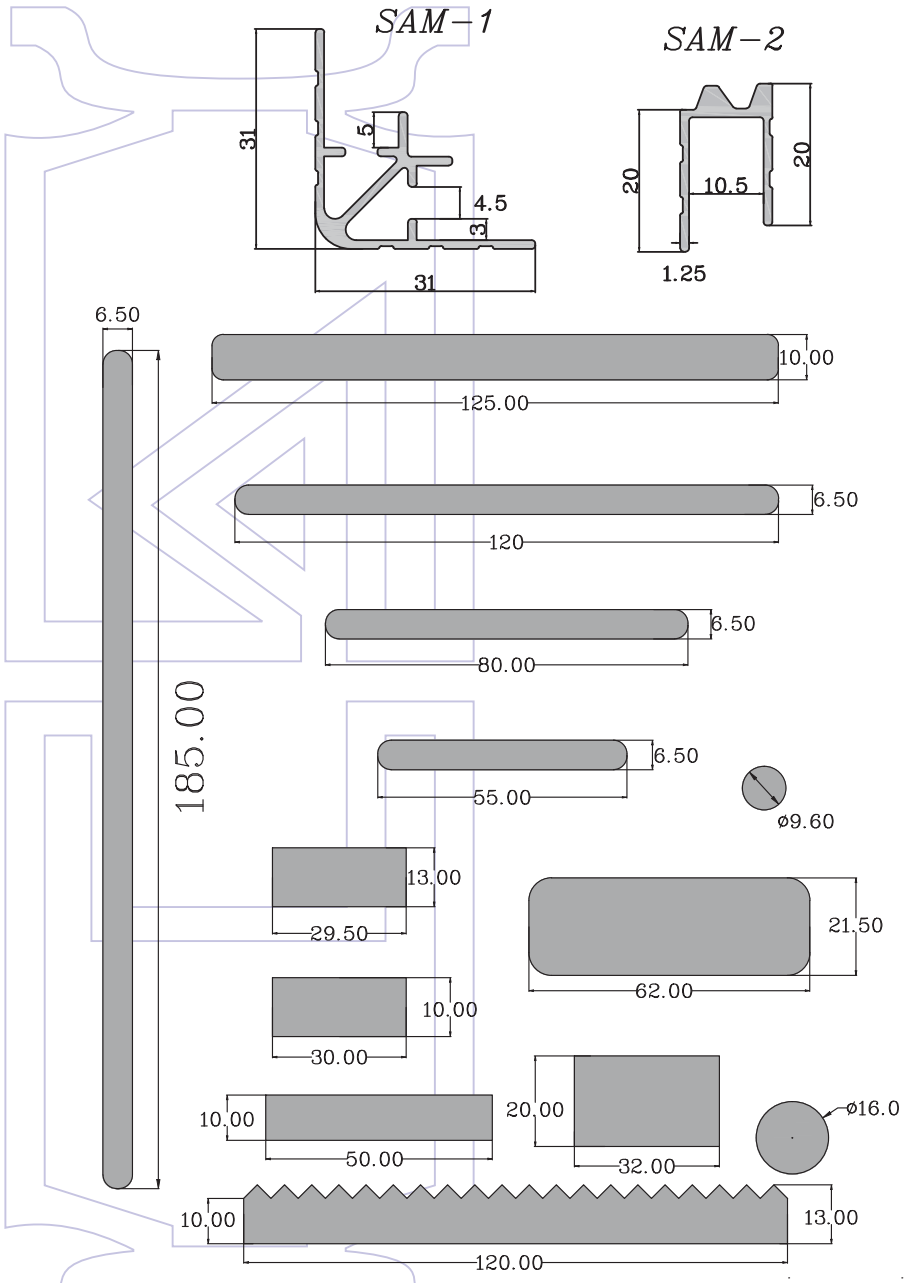

chawla aluminium

Miscellaneous

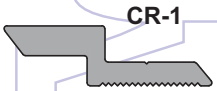

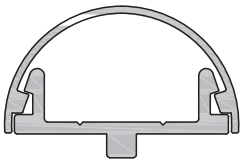

CR−2 (St)

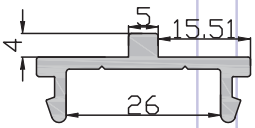

CR−3 (St)

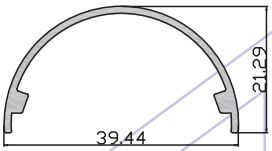

CR−4 (2MM)

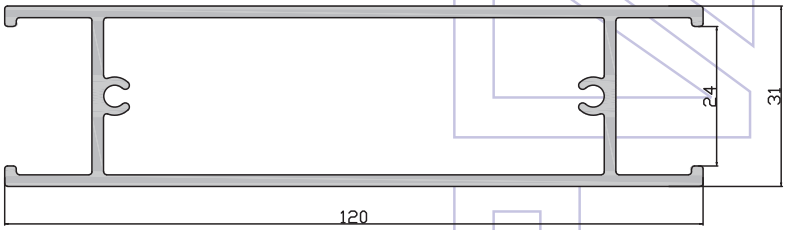

CR−5 (2MM)

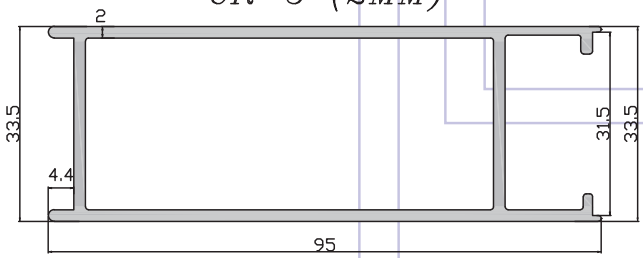

CR−6 (1.2mm)

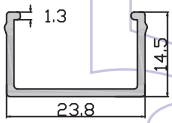

chawla aluminium

Miscellaneous

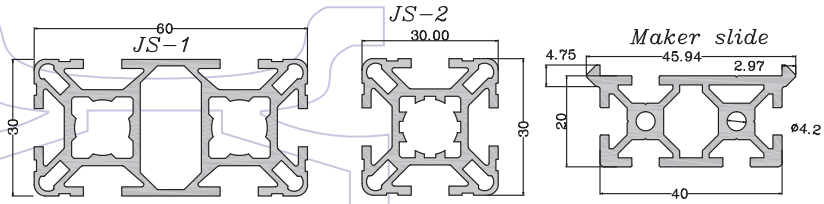

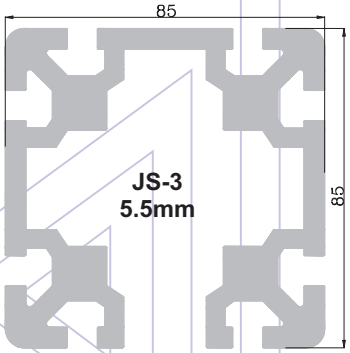

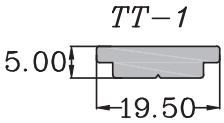

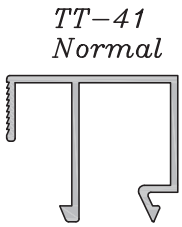

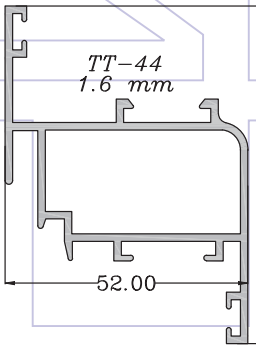

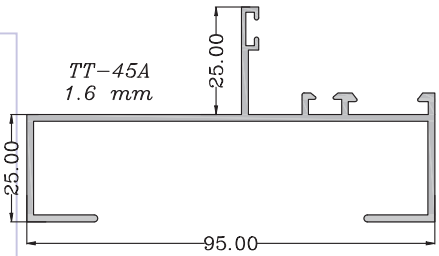

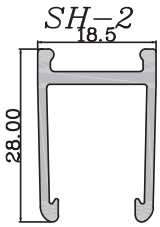

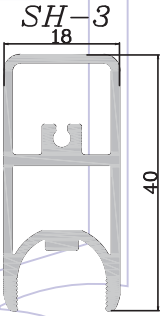

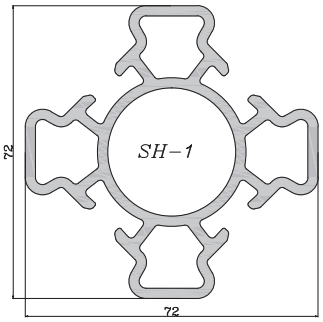

chawla aluminium

Miscellaneous

EQUAL ANGLES

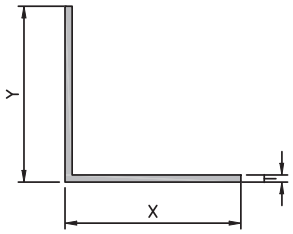

S.No.	SIZES		THICKNESS
	X	Y	T
1	16mm	16mm	1.5 mm
2	16mm	16mm	2 mm
3	1"	1"	3 mm
4	1"	1"	6 mm
5	1 1/4"	1 1/4"	3 mm
6	1 1/4"	1 1/4"	6 mm
7	1 1/2"	1 1/2"	3 mm
8	1 1/2"	1 1/2"	6 mm
9	2"	2"	3 mm
10	2"	2"	6 mm
11	40mm	40mm	5 mm
12	40mm	40mm	8 mm
13	45mm	45mm	1.8 mm

UNEQUAL ANGLE

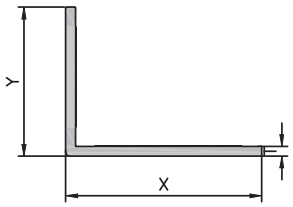

	X	Y	T
1	100mm	76mm	5.3 mm
2			
3			
4			

UNEQUAL ANGLE (WITHOUT CHAMFER)

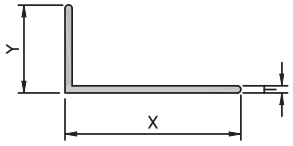

S.No.	SIZES		THICKNESS
	X	Y	T
1	131.50mm	17.50mm	1.60 mm
2	128mm	22mm	1.80 mm
3	67mm	17.6mm	1.25 mm
4	56mm	25mm	1.50 mm

UNEQUAL ANGLE (HEAVY)

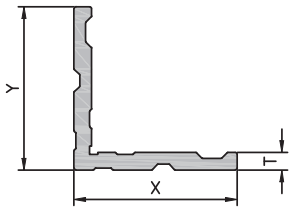

S.No.	SIZES		THICKNESS
	X	Y	T
1	83.6mm	83.6mm	9 mm
2			
3			
4			
5			
6			

chawla aluminium

METRIC MEASURES AND EQUIVALENTS

LENGTH

1 millimeter (mm)		= 0.0394 in
1 centimeter (cm)	= 10mm	= 0.3937 in
1 Metter (m)	= 100cm	= I.0936 yds
1 kilometer (km)	= 1000m	= 0.6214 mile

SURFACE OR AREA

1 sq.cm (cm^2)	= 100mm^2	= 0.1550sq in
1 sq meter (m^2)	= 10,000cm^2	= 1.1960 sq.yds
1 are (a)	= 100m^2	= 119.60 sq.yds
1 sq. km (Km^2)	= 100hectares	= 0.3861 sq miles

CAPACITY

1 cu cm (cm^3)	0.0610 cu in	
1 cu decimetre (dm^3)	= 1000cm^3	= 0.0351 cu ft
1 cu meter (m^3)	= 1000dm^3	= 1.3080 cu yds
1 liter (l)	= 1 dm^3	= 0.2642 US gallon
1 hectoliter (hl)	= 100 liters	= 2.7497 bushels

WEIGHT

1 milligramme(mg)	= 0.0154 grain	
1 gramme (g)	= 1000mg = 0.0353 oz	= 0.017 chattak
1 kilogramme (kg)	= 1000g = 2.2046 lb	= 1.07 seers
1 tonne (t)	= 1000kg=0.9842 ton	= 26.75 maunds

BRITISH MEASURES AND EQUIVALENTS

LENGTH

1 inch	= 2.54cm	
1 foot	= 12 inches	= 0.3048 m
1 yard	= 3 feet	= 0.9144 m
1 rod	= 55 yards	= 5.0292 m
1 chain	= 22 yards	= 20.117 m
1 furlong	= 220 yards	= 201.17 m
1 mile	= 1760 yards	= 1.6093km
1 nautical mile	= 6080 feet	= 1.853km

SURFACE OR AREA

1 sq. inch	= 6.4516 cm^2	
1 sq. foot	= 144 sq. inches	= 0.0929 m^2
1 sq. yard	= 9 sq. yards	= 0.8361 m^2
1 sq. acre	= 4840 sq yards	= 4046.9 m^2
1 sq. mile	= 640 acres	= 259.0 hectares

CAPACITY

1 cu inches	= 16.307cm^2	
1 cu foot	= 1728 cu inches	= 0.0283 m^3
1 cu yard	= 27 cu feet	= 0.7646 m^3
1 pint	= 4 gills	= 0.5683 litre
1 quart	= 2 pints	= 1.1365 litres
1 imperial gallon	= 8 pints	= 4.5461 litres
1 bushel	= 8 gallons	= 36.369 litres

APOTHECARIES

1 fluid ounce	= 8 fl drams	= 28.413 cm^3
1 pint	= 20 ft ounce	= 568.26 cm^3

WEIGHT

1 tola	= 0.41 ounces	= 11.6363 g
1 ounce	= 437.5 grains	= 28.350 g
1 pound	= 16 ounces	= 0.4536 kg
1 seer	= 16 chattak	= 0.93 kg
1 stone	= 14 pounds	= 6.3503 kgs
1 hundred weight	= 112 pounds	= 50.802 kgs
1 ton	= 20 cwt	= 1.0161 tonnes

USA Dry Measure Equivalents

1 pints	= 0.9689 UK pt	= 0.5506 litre
1 bushel	= 0.9689 UK bu	= 35.238 litres

USA Liquid Measure Equivalent

1 fluid ounce	= 1.0408 UK fl oz	= 0.0296 litre
1 pint (16 oz)	= 0.8327 UK pt	= 0.4732 litre
1 gallon US	= 0.8327 UK gal	= 3.7853 litres
1 barrel	= 42 US gallon	= 158.98 litres

THERMOMETER COMPARISON

E = 2 x C

C = F-32 x 5 + 9

F = C x 9 + 5 x 32

Fever Chart

E	F	C
81.0	105	40.5
80.0	104	40
78.0	103	39.4
77.6	102	38.8
76.6	101	38.3
75.4	100	37.7
74.2	98.6	37
72.2	97	36.1

	F°	C°	Environ-ment
Water Freeze	32.0	0	0
Water Boils	212.0	100	200
Absolute Zero	-459.6	-273.15	-546.3
Max Global Human Env.	122.0	50	100

'(Hypothetically the lowest, possible temperature at which all motion would cease.)'

E	F	C
100	122	50
90	113	45
80	104	40
70	95	35
60	86	30
50	77	25
40	68	20
30	59	15
20	50	10
10	41	5
0	32	0
-10	23	-5
-20	14	-10
-30	5	-15
-35.6	0	-17.8
-40	-4	-20
-50	-13	-25

chawla aluminium

Notes

chawla aluminium
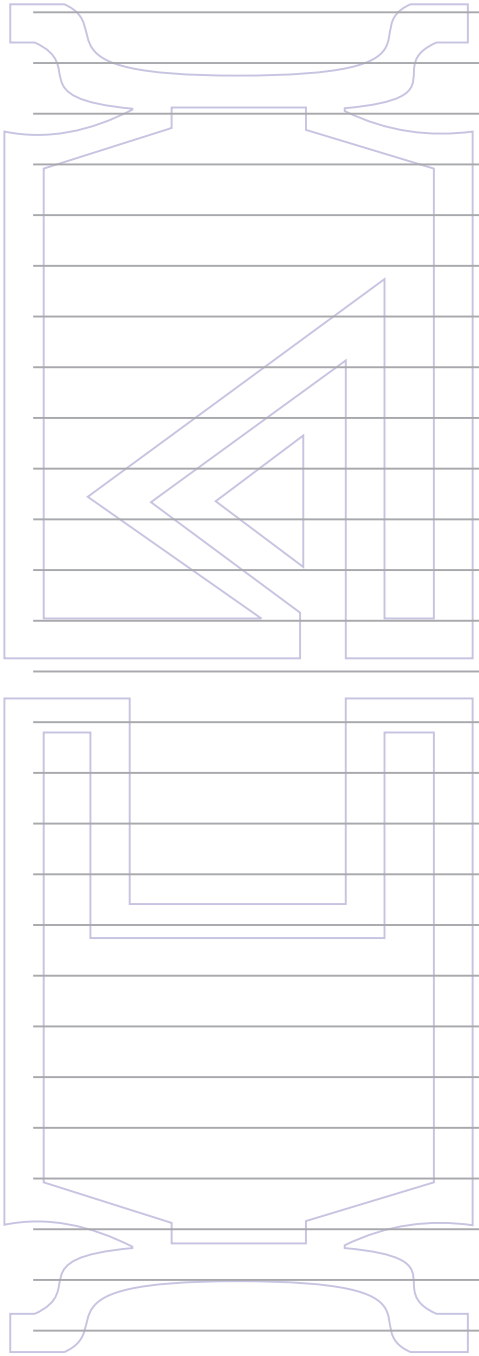
Notes